Fundamentals of:

Welding Steel

Ovako develops high-tech steel solutions for, and in cooperation with, its customers in the bearing, transport and manufacturing industries. Our steel makes our customers' end products more resilient and extends their useful life, ultimately resulting in smarter, more energy-efficient and more environmentally friendly products.

Our production is based on recycled scrap and includes steel in the form of bar, tube, ring and pre-components. Ovako has around 3,000 employees in more than 30 countries and sales of approximately EUR 1 billion. In June 2018 Ovako became a subsidiary within the Japanese Nippon Steel Corporation group, one of the world's largest steel producers. For more information, please visit us at www.ovako.com and www.nipponsteel.com

TABLE OF CONTENTS

1 INTRODUCTION 4

2 WELD REGIONS 5

3 HEAT AFFECTED ZONE 7
3.1 Cooling rate 7
3.2 Plate thickness and joint type 9
3.3 Arc energy and effective heat input 10
3.4 Working temperature 11
3.5 Hardenability 12
3.6 Microstructural changes 13

4 WELDABILITY 15
4.1 Cold cracking 15
4.1.1 Microstructure 15
4.1.2 Hydrogen content 16
4.1.3 Stresses 17
4.1.4 Temperature 17
4.1.5 Preventing cold cracking 17
4.2 Hot cracking 18
4.3 Lamellar tearing 19

5 WELD DEFECTS 20
5.1 Pores 20
5.2 Slag inclusions 20
5.3 Lack of fusion 21
5.4 Incomplete penetration 21
5.5 Spatter and poor arc starts 22
5.6 Shrinkage cavity (or pipe) 22
5.7 Undercut 22

6 FEATURES OF A WELD JOINT 23
6.1 Static strength 23
6.2 Fatigue strength 23
6.3 Impact toughness 24

7 WELD DISTORTIONS 25
7.1 Longitudinal and transverse distortions 25
7.2 Tack welding and welding sequence 26
7.3 Flame straightening 26

8 WELDING OF DIFFERENT STEEL GRADES 27
8.1 General structural steels 28
8.2 Machine steels 29
8.3 High strength structural steels 31
8.4 Quenching and tempering steels 35
8.4.1 Welding of quenching and tempering steels 36
8.4.2 Welding of the IMACRO 37
8.5 Case hardening steels 43
8.6 Boron steels 45
8.7 Spring steels 47

9 REPAIR WELDING OF PROBLEM STEELS 50

10 JOINT WELDING OF NON-ALLOYED AND STAINLESS STEEL 52
10.1 Example of use 53

11 HARDFACING 54

12 EXAMPLES OF WELDING THE OVAKO STEELS 56
12.1 Flange axle 57
12.2 Torsion bar 59
12.3 Repair welding of an axle 60
12.4 Gear 61
12.5 Lifting pin for vessel's plate 62
12.6 Piston rod 63
12.7 Piston 64
12.8 Valve head 65
12.9 Welding a stainless spindle to lever arm 66
12.10 Steering joint 68
12.11 Joint 69
12.12 Track link A 70
12.13 Track link B 71
12.14 Welded beam 72
12.15 Welding a crane rail to beam 74
12.16 Support wheels, rolls 76
12.17 Corrector lever's surfacing 78
12.18 Shovel loader's wear plate 79
12.19 Axles's temporary repair weld 80
12.20 Gear tooth's temporary repair weld 81
12.21 Example of friction welding 82

13 WELDING STANDARDS 83

14 GOOD WORKING ENVIRONMENT ENHANCES PRODUCTIVITY 85
14.1 Industrial safety in welding 85
14.2 Welding fumes 85
14.3 Radiation and noise 85
14.4 Minimizing the risk of accidents 85

1 – INTRODUCTION

Welding is the most common way of joining steels together. It is a metallurgic event where steel is melted, mixed, solidified and heat treated.

Usually the welding becomes more challenging as the steel's strength and/or carbon and other alloy contents increase. To achieve high quality welds, it is important to know and control different effects that welding causes. These need to be taken into account before, during and after the welding procedure itself.

Ovako focuses on bar products and therefore this brochure covers mainly the welding of flat and round bars. The main focus is on weldability and metallurgical features of different steels.

The brochure also includes some practical examples of different welded products. These instructions are aimed to produce as high quality and suitable weld as possible.

The given instructions and recommendations alone do not necessarily guarantee good results. Ultimately the planner, welder and supervisor are responsible for the final quality.

2 – WELD REGIONS

Welding causes changes in steel's metallurgical properties. Heat melts some of the base material and on some parts, the temperature rises without exceeding the melting point. A melting filler metal forms a weld pool together with a molten base material. As the temperature drops, the weld pool solidifies into a final weld. The heat effect causes a distinct region to form on the base material next to the weld. The region is better known as a heat-affected zone, also known as a HAZ. The different regions of weld can be seen on figure 1.

The weld metal (1), also known as a fusion zone, has first melted and then solidified. It typically solidifies in an elongated form. Between the fusion and heat-affected zone (3-6), is a fusion boundary (2).

The heat-affected zone has been exposed to temperatures that cause the base material's crystalline form to change. The closer the area is to the weld, the higher the temperature is that it has been exposed to. The heat-affected zone can be separated into four different regions based on these temperatures.

The region closest to the weld is known as a coarse-grained HAZ (3). This region has been exposed to temperatures over 1100 °C, which has caused austenite grain growth. On a fine grained HAZ (4), the temperature has exceeded the material's A3 limit, causing structural changes. On non- and low-alloy steels, this region typically has a normalized microstructure.

On an intercritical HAZ (5), the structure is partially austenitized and the temperature has been between the material's A3- and A1 –limits.

The outermost part of the HAZ is known as a subcritical HAZ (6). On this region where the temperature has been more than 500 °C, carbides begin to spheroidize and the grain structure starts to recrystallize. Between the heat affected zone and unaffected base material is a zone which may have aged or in tempered steels, annealed.

As the weld cools so do the different regions of the heat affected zone. The temperature changes and the rates at which they change are based on the surrounding environment and can be considered as miniature heat treatments. Different structural changes in the HAZ impact the qualities of the steel and therefore the weld itself.

The microstructure of the HAZ, influences particularly the likelihood of cold cracking. It is important to control changes in this region as they have a major effect on mechanical qualities, especially in welds of high strength steels and steels for low temperature conditions.

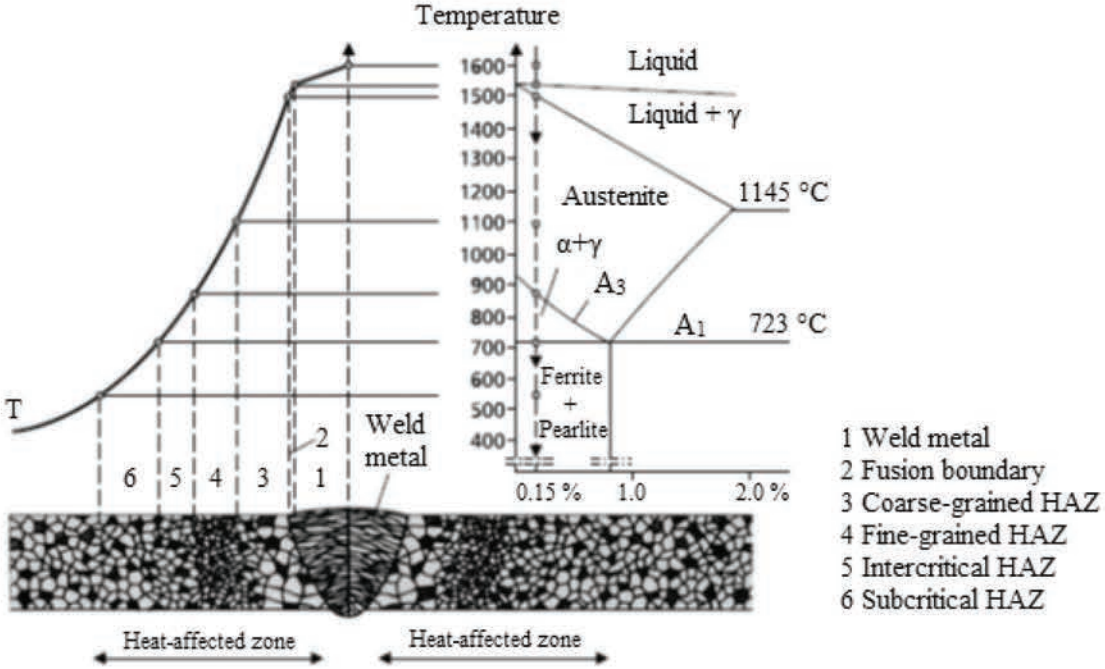

Figure 1 – Weld regions in a steel with carbon content of 0.15%. The grain size is significantly enlarged in the figure.

The curve T represents the maximum temperature the corresponding area of the steel has been in. On the right side of the figure is a part of iron-carbon phase diagram, from which a microstructure for the each temperature can be seen. The vertical dashed line represents a steel with carbon content of 0.15%.

3 – HEAT AFFECTED ZONE

The microstructures of the heat affected zone depend on a steel's hardenability and cooling environment. Hardenability depends on steel's chemical composition.

3.1 Cooling rate

The cooling rate is given in $t_{8/5}$ time, which measures the time it takes the steel to cool from 800 °C to 500 °C. The most crucial changes in the steel's microstructure take place during this interval, while the austenite transforms into different microstructures.

On CMn- and low alloy steels, the $t_{8/5}$ cooling time can be calculated either with the formulas given in EN 1011-2 (2001) standard or graphically from the cooling time curves. The 2-dimensional (1) and 3-dimensional (2) $t_{8/5}$ cooling time formulas are shown below.

The joint type factors used in the formulas are shown in Table 1. The formulas for calculating the effective heat input are introduced later in Chapter 3.3 Arc energy and effective heat input.

More of the different effects of the cooling rate are introduced later on in Chapter 3.6 Microstructural changes. The cooling rate is an important part in determining the final qualities of the HAZ. The main factors affecting the cooling rate are the following:

Table 1 – Joint type factors for 2- and 3-dimensional objects

Type of joint	2-dimensional (F2)	3-dimensional (F3)
Run on plate	1	1
Between runs in butt welds	0.9	0.9
Single run fillet weld on a corner-joint	0.67 to 0.9	0.67
Single run fillet weld on a T-joint	0.45 to 0.67	0.67

$$t_{8/5} = (4300-4.3*T0)*10^5*Q^2/d^2*(1/(500-T0)^2-1/(800-T0)^2)*F_2 \quad (1)$$

$$t_{8/5} = (6700-5*T0)*Q*(1/(500-T0)-1/(800-T0))*F_3 \quad (2)$$

where

T0 = Working temperature (°C)
Q = Heat input (kJ/mm)
d = Material thickness (mm)
F = Joint type factor (F_2 or F_3)

3.2 Plate thickness and joint type

The thicker the welded material is, the faster the heat conducts away from the weld and the cooling rate increases. The cooling rate also depends on the joint geometry, or in other words, on how many different directions the heat can conduct. The plate thickness and joint geometry are taken into account as one combined factor with examples shown in Figure 2. On round bars, half of the diameter of the bar (d/2) is equal to the wall thickness of a plate bar, sheet or tube regarding the way it cools.

After the certain material thickness is exceeded, the change in thickness does not affect the heat conduction anymore, and thickness can be treated as 3-dimensional instead of 2-dimensional.

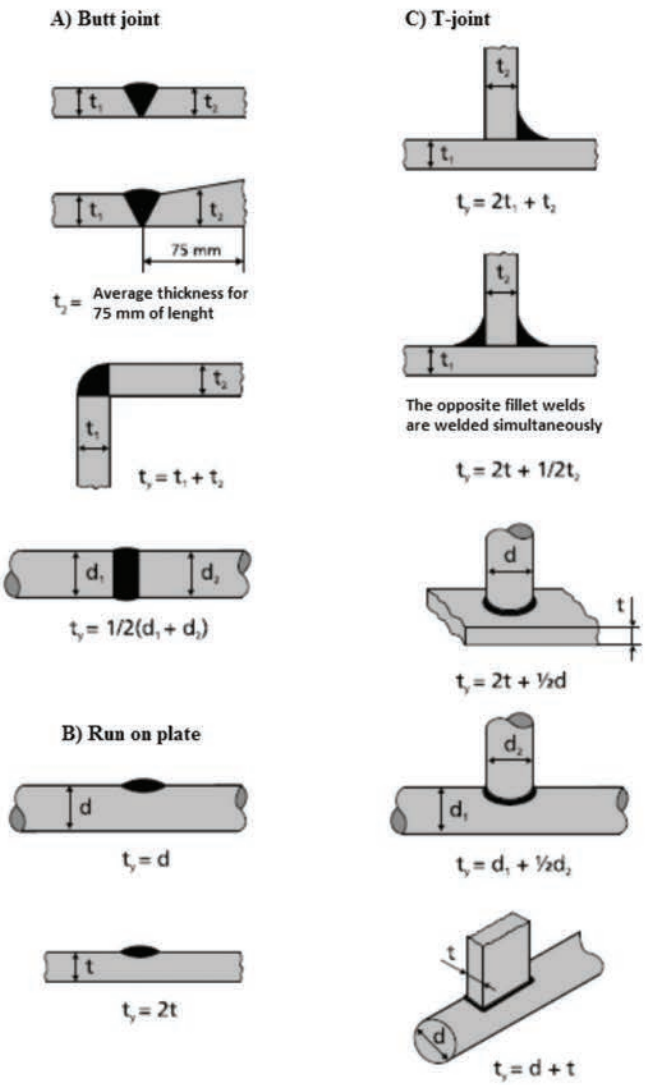

Figure 2 – Examples of calculating the material thickness ty: t = wall thickness of a flat bar, sheet or tube, d = diameter of a round tube

3.3 Arc energy and effective heat input

Energy used in arc welding is usually given per unit of length and can be calculated with the formula

$$AE = \frac{I*U}{v} \quad (3)$$

or

$$E = \frac{I*U*60}{v*1000} \quad (kJ/mm) \quad (4)$$

where
I = welding current (A)
U = arc voltage (V)T
v = arc travel speed (mm/min)

This energy is called either arc energy (AE) or welding energy. Sometimes it is called heat input, despite the fact that it is technically wrong term. The effective heat input defines the part of the arc energy which is transformed to the weld as a thermal energy. The relation between the effective heat input and the arc energy is the following:

$$Q = \eta*E \quad (5)$$

The efficiency factor (η) varies on each welding process. Efficiency factors of the most common processes are the following:

MMA and MIG/MAG	0.8
TIG and plasma	0.6
SAW	1

The effective heat input depends, for example, on welding process, welding speed, welding current, arc voltage, base material, plate thickness and welding position. Typical effective heat inputs for different processes are roughly the following:

MMA	1-4 kJ/mm
MIG/MAG	0.5-3 kJ/mm
TIG	0.5-2.5 kJ/mm
SAW	2-6 kJ/mm

The higher the effective heat input is, more thermal energy is transferred to the weld and the cooling rate decreases.

If the steel does not have a strongly hardening structure, using a large heat input can prevent hardening in the HAZ in certain welds. However, using an excessive heat input reduces the steel's impact toughness.

3.4 Working temperature

The object's temperature during the welding (working temperature) has a major effect on its cooling rate. The higher the working temperature is, the slower the cool down. As an example, using preheating and interpass temperatures for preventing hardening is based on this fact.

The need for preheating can be determined either graphically from the curves or mathematically with the ormula in EN 1011-2 (2001) standard shown below.

The carbon equivalent is calculated with the CET formula, rather than the IIW's CEV formula, since CET is better suited for steels with a higher carbon content.

In multi-pass welding, the recommended interpass temperature is the same as the pre-heating temperature.

$$T_p = 697*CET + 160*\tanh(d/35) + 62*HD^{0,35} + (53*CET-32)*Q-328 \quad (6)$$

where

T_p = Preheating temperature (°C)
CET = Carbon equivalent = C + (Mn+Mo)/10 + (Cr+Cu)/20 + Ni/40 (%)
tanh = Hyperbolic tangent
d = Plate thickness (mm) (thickness of a single plate, not the combined thickness)
HD = Diffusible hydrogen (ml/100g deposited weld metal)
Q = Heat input (kJ/mm)

3.5 Hardenability

Hardenability describes steel's ability to form martensite in quenching. The ability is highly dependent upon the steel's chemical composition.

The main factor affecting hardenability is the carbon content. On highly weldable steels, the carbon content is generally limited to 0.25%. When the carbon content exceeds the 0.25% limit, special measures are required for welding even normal material thicknesses. Required extra procedures may include, for example, preheating and increased working temperature.

In addition to carbon, most of the other alloys like manganese, chromium, nickel, molybdenum and boron increase the steel's hardenability.

Weldability can be evaluated with a so called equivalent carbon content (carbon equivalent, CEV or CET) which takes steel's hardenability into account.

Steel is considered highly weldable if its CEV value is less than 0.41.Weldability is still considered good up until the limit of 0.45. Steels with a carbon equivalent, CEV, over 0.45 are still weldable but with certain limitations. Values are only estimates and they do not solely guarantee weldability since it also depends on a base material's thickness.

Ovako always provides a material certificate with each delivery from which the carbon equivalent may be easily calculated.

There are several formulas for carbon equivalent, the most common being IIW's CEV, seen below.

$$CEV = C + Mn/6 + (Cr + Mo + V)/5 + (Ni + Cu)/15 \ (\%) \qquad (7)$$

3.6 Microstructural changes

Steels with different hardening abilities behave differently as the cooling rate varies. The changes can be seen by taking a look at the so called transformation diagrams, like the continuous cooling transformation and time-temperature transformation diagrams. More information on transformation diagrams and their use can be found from the literature.

A continuous cooling transformation (CCT) diagram is a well suited for welding purposes. An example of the diagram is shown in Figure 3. The diagram represents changes in high strength structural steel's HAZ with different cooling rates.

If the effective heat input is low in relation to material thickness and hardenability, then cooling that occurs quickly can cause the microstructure to become completely martensitic. Curve 1 goes from the austenite region to the martensite region and goes through it, forming a 100% martensitic structure. As the carbon content increases, so does the hardness of the formed martensite.

Increasing the heat input or preheating the object to increase the working temperature leads to a lower cooling rate causing the austenite to transforms at least partially into softer and tougher structures (curves 2 and 3). An excessive heat input can cause weld defects and might lead to decreased impact toughness due to large grain size. To prevent the forming of hard and brittle microstructures, it is recommended to use preheating and increased working temperature instead of raising the heat input.

Curve 4 represents the cooling rate after rolling or normalization which usually leads to a tough ferritic-pearlitic structure even on high strength structural steels. However, a completely ferritic-pearlitic structure can be achieved in welding usually by using S355J0 grade or softer, for example S275JR or S235JR.

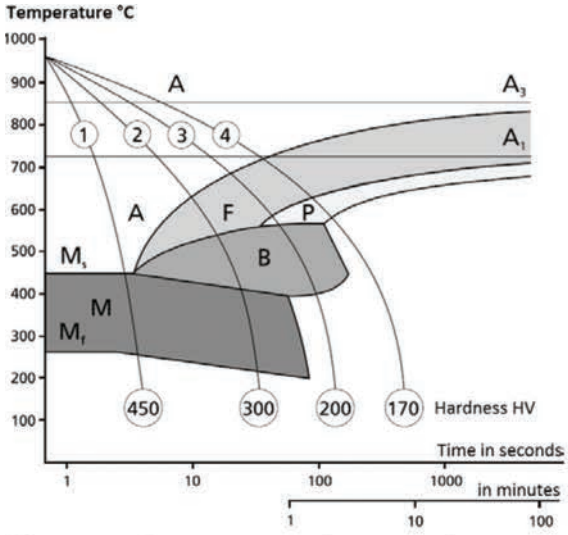

Figure 3. Continuous cooling transformation (CCT) diagram

A = austenite
F = ferrite
P = pearlite
B = bainite
M = martensite
Ms = martensite transformation starts
Mf = martensite transformation finishes
A3 = A3 –temperature (850 °C)
A1 = A1 –temperature (723 °C)
HV = Vickers hardness

Curve 1:

- low effective heat input Q; e.g. ø2.5 mm rod. Q = ca. 0.6 kJ/mm
- martensitic microstructure
- high risk of cracking

Curve 2:

- higher effective heat input Q; e.g. ø4 mm rod. Q = ca. 1.5 kJ/mm
- in addition to ferrite and perlite, the microstructure has martensite
- significantly lower risk of cracking

Curve 3:

- high effective heat input Q or increased working temperature; e.g. ø5 mm rod, Q = ca. 2.5 kJ/mm or 200 °C working temperature, ø4 mm rod
- microstructure has parts of ferrite, pearlite and bainite
- very low risk of cracking

Curve 4:

- cooling path after rolling or normalizing
- ferritic-pearlitic microstructure
- no risk of cracking

4 – WELDABILITY

The term weldability defines how suitable the material is for welding. Steel is considered to be highly weldable when a required filling weld can be done without extra measures. If the steel's weldability is poor or restricted and the weld is done without necessary arrangements, different problems may occur during the welding process or later in the use. The most significant of these welding metallurgical problems are:

- cold cracking
- hot cracking
- lamellar tearing
- deterioration of impact toughness.

The most common one of these is a cold crack, which can occur in welding of hardening low- and high alloy steels.

The next chapter talks about the defects mentioned above, what causes them and how to prevent them.

4.1 Cold cracking

The risk of cold cracking is present in the welding of high strength and other low alloy steels in particular. The following factors are preconditions for cold cracking to occur:

- brittle microstructure in the HAZ, mainly martensitic
- too much hydrogen in weld
- mechanical stresses in weld

Cold cracks can occur as a result of all the above after the weld has cooled to under 150 °C. Removing any of these preconditions is usually enough to prevent cold cracking from happening. Different cold cracking types are shown in Figure 4. Usually cold cracks occur on the HAZ, but on high strength steels they may also appear on the weld metal itself. Cold cracking is also known as hydrogen cracking, delayed cracking or underbead cracking.

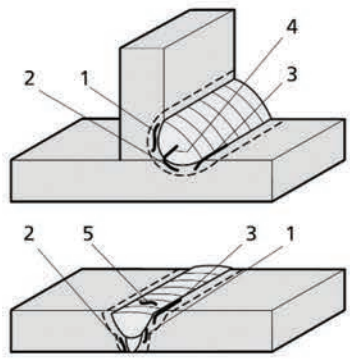

Figure 4. Different cold cracking types

Cold crack appearance

A In HAZ
1. Underbead crack
2. Root crack
3. Toe crack

B. Weld metal
4. Root crack
5. Transverse crack (usually requires alloyed filler metal)

4.1.1 Microstructure

When steel hardens, the microstructure transforms into martensite. Hardening requires a fast enough cooling rate and certain alloying.

The hardness and toughness of the martensite depend on the carbon content. The martensite

becomes harder and more brittle as the carbon content increases. For example, a carbon content of 0.2% has a hardness of about 470 HV and a 0.4% has about 640 HV.

Martensite softens and its toughness increases when it is annealed.

The transformation of martensite and its final content on the HAZ depend on steel's hardenability and cooling rate. Higher carbon content and other alloys cause martensite to form easier.

In addition to a possible martensite structure, the HAZ can also include other less dangerous structures. Martensite may appear locally or on very narrow areas which makes it more difficult to recognize the microstructure.

4.1.2 Hydrogen content

Hydrogen can dissolve into the weld in several ways. It dissolves into the weld pool as ions, but as the weld cools and steel solidifies, it turns atomic.

Significantly less hydrogen can dissolve into solid microstructures than molten ones. From the weld metal, hydrogen diffuses to the HAZ.

During the cooling, hydrogen atoms attempt to unite to form hydrogen gas. Some of the gas leaves the steel and some of it segregates at small openings the steel's crystalline structure has, particularly in the welds and its surroundings. The pressure of the hydrogen gas can get very high, sometimes to several thousand bars. Hydrogen's pressure causes openings to grow, which build up into cold cracks.

Hydrogen can get into the weld fro m rod coatings, flux and flux core, impurities of the welding wire, rust, snow, ice, paint, grease, dirt or simply from humidity in the air. Usually the filler material is the main source of the hydrogen.

With different welding processes, diffusible hydrogen (HDM) varies. Typical HDM values with each process are s hown below.

Welding process and filler metal	Diffusible hydrogen HDM (ml/100g deposited weld metal)
MMA	
Rutile rods	20-30
Basic rods	3-15
MIG/MAG	
Solid wire	1-5
FCAW	
Rutile filler	3-5
Basic filler	2-5
Metallic	3-5
filler	
SAW	3-15

The cellulose and rutile covered rods have a high hydrogen content, which is why they are recommended only for welding of the S235JR and S275JR –grade steels.

Basic rods are also known as low hydrogen rods. As the base concentration in the rod increases, the hydrogen content in the weld decreases. Basic electrodes are prone to absorb moisture. To prevent this, they should be stored correctly and if necessary, dried following the manufacturer's instructions. Moisture resistant rods are also available. They are much less likely to absorb moisture from the surrounding air than ordinary basic rods. Flux used in submerged arc welding must be stored and dried following the manufacturer's instructions.

Solid wires have a lower tendency to absorb moisture, but it may cause rust damage to them. The optimal processes to achieve low hydrogen content are MIG/MAG and TIG welding. Using a lower working temperature, these processes make the welding of high strength steels possible.

4.1.3 Stresses

Stresses are one of the factors contributing to the forming of cracks. Most of the stresses are caused by the welding itself. Locally heated areas try to expand but the surrounding cold material prevents this, causing the hot areas to upset.

In contrast, cooling causes the steel to shrink, leading to tensile stresses sometimes as high as the yield point. The problem is emphasized on rigid structures.

Stresses can be reduced by using a considerably lower strength filler metal or an increased working temperature. After the welding, stresses can also be reduced with a stress relieving heat treatment. However, if the weld has cooled down before the stress relieving, it does not affect the cold cracking tendency (see next chapter 4.1.4 Temperature).

On rigid structures, the problem can possibly be amended with minor structural changes and by using the correct welding sequence (see chapter 7 “Weld distortions”).

4.1.4 Temperature

Cold cracks develop after the temperature drops to about 150 °C. Cold cracking requires hydrogen to diffuse, which happens at temperatures as low as room temperature. Cracks may develop as late as 1-2 days after the welding. For this reason, the inspections are usually done 24 hours after the welding.

Cold cracking can be prevented by maintaining the increased working temperature of 150 °C long enough after the welding (so called dehydrogenation heat treatment, or DHT). The temperature needs to be maintained long enough, sometimes for several hours, for the hydrogen to travel away from the weld. An alternative s olution is to perform a stress relieving without letting the weld cool to under 100 °C.

4.1.5 Preventing cold cracking

By choosing a highly weldable steel (low carbon equivalent), suitable joint type and lowest strength filler metal as possible, cold cracking can be prevented as early as the planning phase. In repair welding, the previously mentioned factors cannot usually be exploited.

The most effective way to prevent cold cracks is to use low hydrogen fillers, correct welding parameters and if necessary, preheating and interpass temperature. As the steel’s strength and thickness increase, more attention needs to be paid to the welding processes and consumables.

The procedures to prevent cold cracking and ensure an adequate weld are listed below:

Clean the groove of any ice, moisture, rust, grease, dirt or paint.

Use low diffusible hydrogen fillers, store the fillers correctly and dry them if necessary. More information about the filler metals and their storing is available through their manufacturers.

As the material thickness increases, more heat must be delivered to the weld. In other words, arc energy (AE) must be increased, which can be achieved by lowering the welding speed.

Hydrogen leaves the weld quickly if the temperature is raised. By preheating the object, the working temperature increases which prevents hydrogen induced cracking (HIC). The suitable working temperature is usually 100-300 °C, depending on a steel’s grade.

Microstructures susceptible to hydrogen embrittlement can be detected, for example with a hardness test. Usually a hardness under 350 HV does not cause problems. If very low hydrogen fillers are used, even 400 HV may be acceptable. If the welding is done using an increased working temperature, even 450 HV can be acceptable.

Stresses make the weld more susceptible to hydrogen embrittlement. The risk is extra

high in the welding of thick materials and rigid structures, which is why filler metal that are too strong should not be used. A general rule is that the filler metal's strength should not be more than 5-10 % higher than the base material's.
Use of an austenitic or undermatching filler metal is also possible if the properties of the weld allow it.

4.2 Hot cracking

Hot cracks, also known as solidification cracks, develop in high temperatures (over 1200 °C) as the weld solidifies or right after. The most common type is a longitudinal crack on the centerline of the weld. It can appear on the weld's surface or just below, either as a separate crack or starting from a crater crack, Figure 5. Because of the oxidation, the fracture surface is bluish.

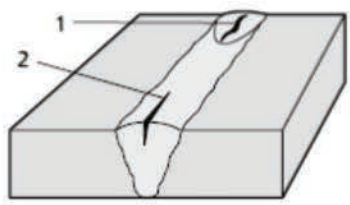

Figure 5 – Hot cracks. 1: crater crack and 2: longitudinal crack. Narrow and deep bead increases the risk of hot cracking.

The main factors behind hot cracking are the shrinking of the weld as it cools and solidifies, along with a gathering of the alloys and impurities at the weld's centerline. A narrow and deep bead, high transversal stresses and certain impurities increase the hot cracking risk.

Filler metals usually contain very few impurities. However, impurities from the base material can mix into the weld metal. Sulphur and phosphorus are particularly problematic, as they form liquid films. These films, which solidify in low temperatures, are located on the center of the weld, which is last to solidify. A narrow and deep weld bead increases the risk of hot cracking, as it causes the solidification front to advance horizontally and perpendicularly from the fusion boundary to the weld's centerline, where the impurities and compounds with low melting points gather up.

Hot cracking appears particularly in processes with a deep penetration such as a MIG/MAG and SAW. The welds of the free machining steels are also susceptible to hot cracking due to their high sulphur content.

For estimating the susceptibility of the hot cracking on ferritic steels, a formula based on chemical composition has been developed. The Units of Cracking Susceptibility (UCS) was originally developed for the SAW process, but it can also be applied to other processes. The following guidelines lower the risk hot cracking:

- The depth of the bead needs to be smaller than the width.
- A high manganese filler metal binds the harmful sulphur into a harmless manganese sulfite.
- Low arc energy results into a small penetration, reducing the dilution.
- By lowering the welding speed.
- With pulsating, the weld can be "mixed", which prevents impurities from gathering at the centerline of the weld.
- Improve the fitting so the root gap is smaller.

$$UCS = 230\,C + 190\,S + 75\,P + 45\,Nb - 12.3\,Si - 5.4\,Mn - 1 \qquad (8)$$

UCS < 10	no risk of hot cracking
UCS = 10 to 30	low risk, which increases as the depth/width ratio increases, welding speed is high or root gap is wide
UCS > 30	high risk of hot cracking

4.3 Lamellar tearing

Lamellar tearing is related to rolled steel's features in the thickness direction. If the weld joint is shaped in a way which causes high tension through-thickness, the chance for lamellar tearing exists. Typical spots for the lamellar tearing and tearing mechanism are shown in Figure 6.

Steel's toughness through-thickness depends on a number of inclusions and their shape. Elongated inclusions decrease the toughness in direction of thickness.

Lamellar tearing risk can be reduced with the following ways:

- Using high power (by welding through the whole plate, if possible)
- Increasing the groove's area
- Using the right bead sequence
- Welding a buttering weld with a tough, low-strength filler metal

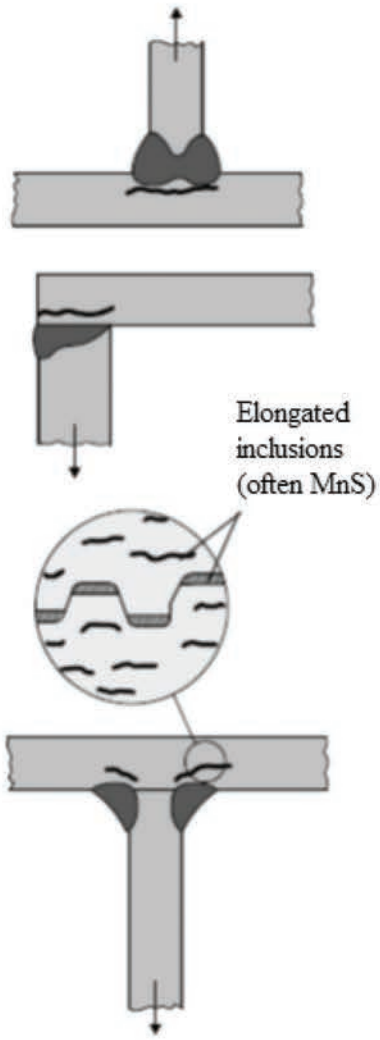

Figure 6 – Typical locations for lamellar tearing and tearing mechanisms

5 – WELD DEFECTS

The previously covered weld defects, cold and hot cracking, and lamellar tearing are related to a steel's limited weldability. The flaws actually related to the welding performance are the following:

- pores
- slag inclusions
- lack of fusion
- incomplete penetration
- spatter and poor arc starts
- shrinkage cavity (also known as pipe)
- undercut

The most common defect is a lack of fusion, followed by the pores and incomplete penetration.

5.1 Pores

Pores are caused by gases that got trapped in the weld, as they did not escape before the molten pool solidified. Pores can appear either alone or in larger groups. They are usually round or elongated, from which an example can be seen in Figure 7. The reasons behind the pores are:

- an inadequate gas or slag shielding
- moist filler metal
- impurities on the groove surface (dirt, paint, grease, rust, moisture, etc.) base material's segregations and high sulphur content
- solidification that happens too quick
- use of welding current that is too low
- using arc that is too long

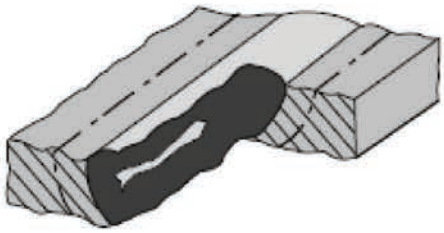

Figure 7 – An elongated pore (or a wormhole)

On a gas-shielded arc welding, wind or a draft may weaken the gas shielding. In that case, the gas flow should be increased, the nozzle distance shortened and an adequate form of protection arranged.

In MMA welding, pores can be caused by the moisture or eccentricity of the rod's covering; by using an arc that is too long, which results in an inadequate shielding from the rod's covering; or by a welding current that is too low, which caus es the rod to ignite and burn poorly.

Moisture in rods, especially when using low welding currents, causes pores. Basic rods, in particular, are susceptible to moisture.

Impurities on groove surfaces are a common cause for pores. Rust, mill scale, grease, dirt, moisture and paint are harmful in welding and increase the chances of developing pores.

5.2 Slag inclusions

In multipass MMA welding, sometimes the previous run's slag does not melt properly, leaving slag trapped between the layers. However, normally the arc melts the slag completely. An example of slag inclusions is on Figure 8.

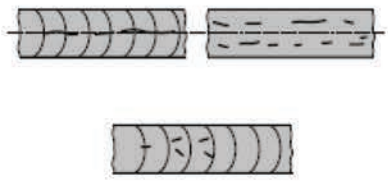

Figure 8 – An elongated pore (or a wormhole)

Slag inclusions develop when slag gets caught on sharp and narrow cavities. An incorrect weaving motion causes an undercut to the groove's sidewalls, on which the slag sticks and can be seen as slag lines on radiography.

Sharp notches between weld layers may also cause slag inclusions. The root's and passes' cross section should be concave. Slag removal is also easier from a smooth and concave surface.

When welding thick steel objects with rods that are too thin, slag lines form easily. The problem can be solved by using a rod with the correct diameter so the weaving motion doesn't grow too wide. Slag inclusions can also be avoided with a correctly aligned and shorter arc.

Slag inclusions may also occur if the next pass is done with a current that is too low or a traveling speed that is too high, which does not produce enough heat to melt the previous run's slag. Rutile rods have a higher tendency to cause slag inclusions than basic rods because of their slag's higher melting point.

Thorough slag removal is a cornerstone of a high quality multi-pass weld. Gas arc weld processes are known to form little slag, which is why slag removal is not always necessary after each weld layer. Nonetheless, careful slag removal guarantees a high quality weld.

5.3 Lack of fusion

Lack of fusion is a result of poor mixing of the weld and base material. It may occur if the heat input is insufficient for melting the base material and the molten filler gets on the cold groove surface, preventing the arc from penetrating into the base material, Figure 9.

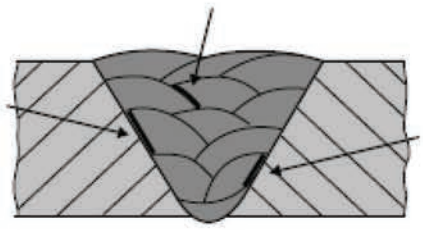

Figure 9 – Lack of fusion

Lack of fusion can be prevented by using high enough power, positioning the arc correctly so it melts the weld area, and making sure that the molten pool does not get in front of the arc.

Lack of fusion is a hazardous defect for the weld's strength and fatigue life, and it is not accepted in the welding classes B or C.

5.4 Incomplete penetration

A typical root defect is an incomplete penetration at the weld's root. This is caused by a root gap that is too small, a rod with a diameter that is too large, an arc that is too long or by a fault in the welding performance. The penetration might be incomplete, like in Figure 10, or the root fusion might be incomplete, like in Figure 11. A defect can be avoided by placing the rod deep enough in the groove at the start point or by grinding the joint part.

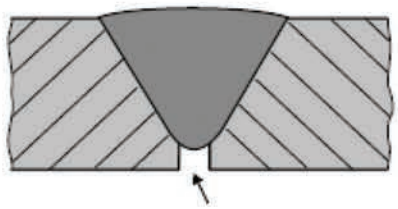

Figure 10 – Incomplete penetration

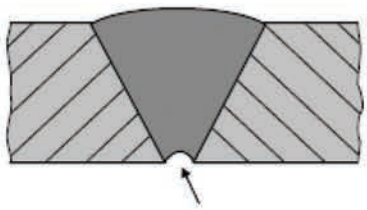

Figure 11 – Incomplete root fusion

In large structures, the groove fittings are often poor and achieving complete penetration from only one side is difficult. The root needs to be opened deep enough to remove all possible defects.

5.5 Spatter and poor arc starts

Spatter weakens the structure's appearance. If a flawless surface is pursued, it should be protected. Spatter can be caused, for example, by the wrong welding parameters, an arc that is too long, magnetic arc blow or moist welding rods.

At the spot where the arc is started, a small porous section usually develops, along with a small hardened area that has small cracks. Ignition scars also weaken the appearance, which is why the start should always take place in a groove. The arc is ignited ahead of the actual starting point, and the porous ignition area gets welded over, removing the faulty starting point. Alternatively, ignition scars can be removed by grinding the surface.

5.6 Shrinkage cavity (or pipe)

Shrinkage cavity, which is shown in Figure 12, usually develops in the welding of a root run on the bead's end. The molten pool solidifies starting from the groove's sidewalls, causing a shrinkage cavity that reaches the surface. A pipe is often united with a crater crack on the bead's end.

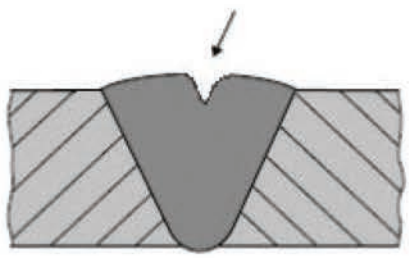

Figure 12 – Shrinkage cavity

Defects can be avoided by reducing the welding current before turning off the arc or by moving the arc onto an area that is already welded before turning it off. The pipe needs to be removed, for example, by grinding or chiseling the weld before continuing the welding. In SAW welding, the arc can be stopped over special tabs to prevent pipes from developing to the actual work object.

5.7 Undercut

An undercut is a crater or groove on the weld groove's sidewall or on the weld's toe, see Figure 13. They develop when the base material melted by the arc drifts away and the filler metal does not fill the cut.

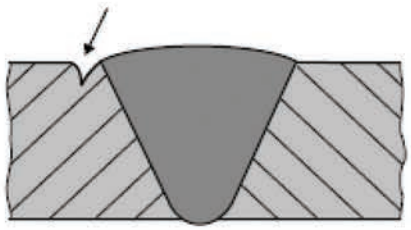

Figure 13 – Undercut

Typically, undercutting is a result of excessive current or voltage, an arc that is too long or poor welding technique. Too short of a stop on the weld groove's sidewall or moving the arc out from the weld groove can easily cause undercutting.

In fillet welds, if the rod is aligned too upright or the current or voltage are too high, the undercut develops on the junction of the vertical plate and weld.

If the weld groove angle is narrow when using a large diameter rod, it may cause undercutting on the V-groove's sidewalls. Alongside the undercut develops a slag inclusion, which can be seen as two uniform slag lines in radiography.

Undercut decreases, in particular, the weld joint's fatigue strength.

6 – FEATURES OF A WELD JOINT

The features of a weld joint depend on metallurgical factors along with a joint's position and shape related factors. For fatigue strength, the joint position and shape are usually the decisive factors. Other features depend more on the welding metallurgical factors.

Stress concentrations form on the welded structure, which need special attention when analyzing the fatigue strength (Figure 14).

Ultimately, the joint's reliability depends on all the factors, each with their own weight. For example, in a brittle fracture analysis, the toughness of the base material and weld, weld defects, and notch effect caused by the joint shape need to be taken into account.

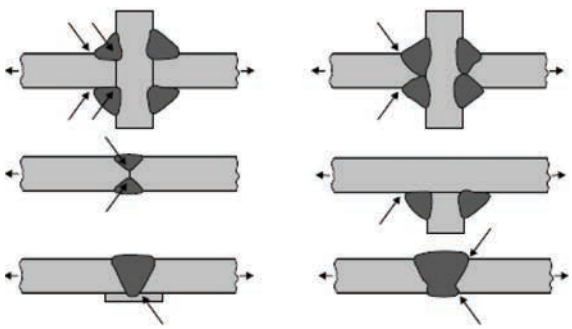

Figure 14 – Stress concentrations on a weld joint

6.1 Static strength

Static strength is usually not a problem in the weld joints of general structural steels or those that are similar. Usually, the joint is at least as strong and tough as the base material.

In the weld joints of hardened, quenched and tempered, and cold worked steels, the strength properties need to be taken into account more precisely.

Welding heat lowers the strength of the steels mentioned above. It causes an area softer than the base material to develop in the HAZ. The area's width increases as the working temperature and the heat input increase.

The soft area's influence on the joint's strength depends on the area's geometrical factors. Stronger material surrounding the area generates triaxial stress on it, which increases the yield strength. Because of this, the strength does not necessarily decrease despite the soft area, unless the area's width is high compared to material thickness.

6.2 Fatigue strength

Stresses' maximum amplitude and number of cycles determine if fatigue strength is a critical factor in the design of the welded structure. The limits for the stress range are given in standard EN 1993-1-9 (2005). Structures exposed to a number of cycles greater than the limit need to be designed by using the fatigue strength.

Steel's notch sensitivity increases as the strength increases. The fact that a fatigue crack's growth rate does not depend on steel's strength or microstructure should to be noticed. The fatigue strength in weld joints without post-treatment is roughly the same with all steels after the number of cycles exceeds 106. The weld bead's and especially weld defects' notch effect and residual stress have a decisive effect on the joint's fatigue strength. The fatigue crack's starting point in welded stiffening is shown in Figure 15.

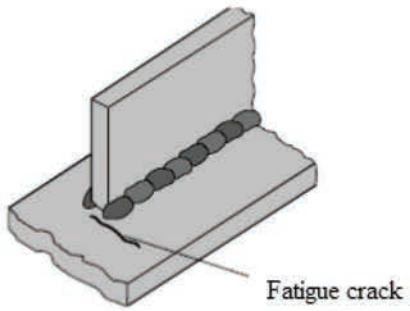

Figure 15 – Fatigue crack on a longitudinal joint

Different methods can be applied to increase the joint's fatigue strength:

- Grinding, machining, TIG remelting or ultrasonic impact treating the weld's edges lowers the notch effect.
- Sand blasting or shot- or hammer-peening forms compression stress on the surface, which is beneficial for the fatigue strength.
- Stress relieving, spot heating, or local compression and initial overload change the residual stresses, improving the fatigue strength.

Structures under fatiguing loads, particularly made of high strength steels, need special attention on the joint's shape and position, welding performance, and post-treatment so that the basic features get optimally exploited.

6.3 Impact toughness

Microstructures developed by welding have impact toughnesses that vary on a large scale. Usually the most brittle spot is located on the fusion boundary, overheated zone or in weld metal. The simplest and most common method to measure a joint's brittle cracking susceptibility is the Charpy V -impact toughness test.

The required impact toughness depends on the structure's use. When the application is more challenging and the operating temperature is lower, usually in even lower temperatures, a certain impact strength is required. Usually increasing arc energy lowers impact toughness by causing a grain growth, by developing brittle microstructures such as bainite and grain boundary ferrite, and by increasing impurity concentrations on grain boundaries.

Impact toughness can be improved by increasing the number of passes. In multi-pass welding, the next pass heat treats, or normalizes, the previous runs, therefore decreasing the grain size in the heat treated area (Figure 16). This leads into an improvement of toughness characteristics.

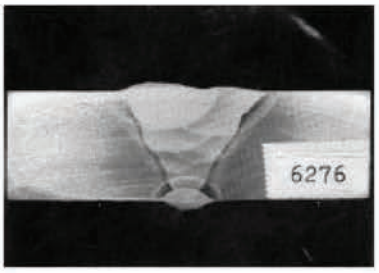

Figure 16 – Macroscopic specimen of multi-pass weld

7 – WELD DISTORTIONS

Welding's high temperatures cause materials to expand. The heated material cannot expand freely, causing it to upset instead. The steel is attempting to shrink as it cools, developing tensile stress into the weld and its surroundings. Residual stresses can rise, even as high as the yield point of the steel, which decreases the fatigue strength.

7.1 Longitudinal and transverse distortions

Residual stresses cause both longitudinal and transverse distortions (Figure 17). The size of the shrinkage depends on the heat input, number of passes, structure's rigidity and groove shape. Along with shrinking, other distortions such as twisting, angular distortion, bowing and buckling can develop.

Distortions can be prevented with the following actions:

Longitudinal shrinkage:
- Decreasing the heat input
- Multi-pass welding
- Intermittent welding
- Tack welding sequence from the edges to the center
- Placing the welds symmetrically on the neutral axis

Transverse shrinkage:
- Decreasing the heat input
- Avoiding excessively large fillet welds
- Using clamps and fixtures
- Correct groove shape, referably X-groove and double-sided welding
- Short tack welds
- Reducing the root gap
- Backstep welding
- Skip welding

Twisting
- Sufficient tack welding, or welding tacks to a larger area than the weld
- Using clamps and fixtures

Angular distortion
- Decreasing the heat input
- Correct groove shape
- Reducing the number of passes and reducing fillet weld's throat thickness by increasing the penetration
- Reducing the root gap
- Using pre-angling or pre-bending

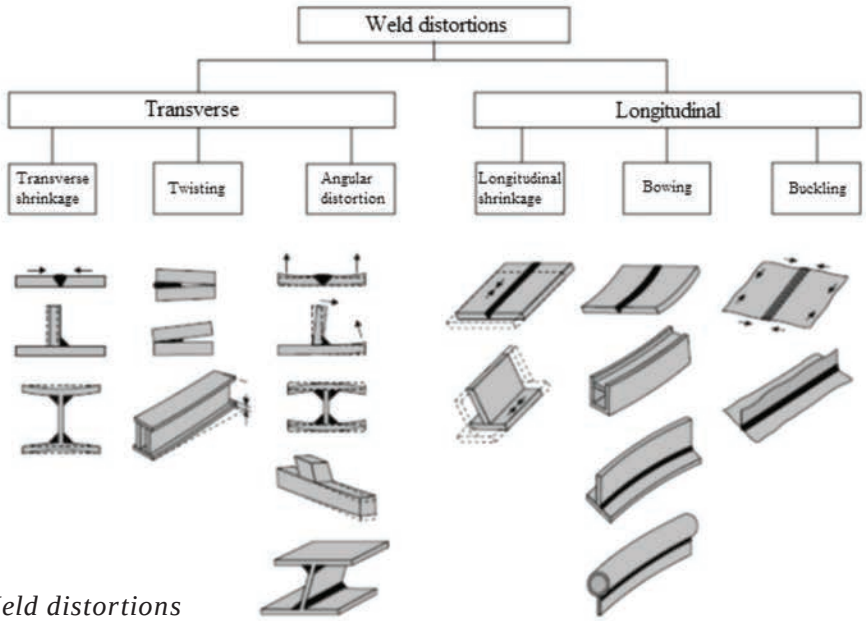

Figure 17 – Weld distortions

7.2 Tack welding and welding sequence

The purpose of tack welding is to ensure correct dimensions in the final structure. Possible distortions and necessary measures need to be taken into account in the tack welding phase. Tack welding is recommended to be done usually with the skip welding technique; by welding tacks sparsely and then returning back between them to weld another. However, placing a tack weld on the actual weld's ending is not recommended. Welding can be done without using tack welds, if using suitable clams, jigs or fittings is possible.

The basis of welding sequence planning is the distribution of stresses and heat, so they spread as equally as possible in longitudinal direction, allowing the object to expand and shrink freely from the object's center to the edges.

By using the skipping technique, the whole structure stiffens and distortions are smaller. The butt welds should preferably be welded first.

Due to tack welding's low heat input, possible preheating needs should be taken into account to prevent cold cracking.

7.3 Flame straightening

Flame straightening is also known as flame or heat shrinking. In addition to mechanical methods, steel can be straightened by using heat. The temperature must be raised usually to about 650-800 °C to make the plastic deformations permanent. The heated area cannot expand due to the cold surroundings, causing it to upset. As the material cools, it shrinks, forming a tension which straightens the structure.

When measuring the steel's temperature, either different tactile temperature sensors or temperature indicating crayons or paints can be used. Alternatively, the temperature can be estimated by using the table below.

Steel's surface color	Temperature °C
Brown red	600
Dark red	650
Cherry	750
Dark orange	900
Yellow	1000
Light yellow	1100
White	1200

8 – WELDING OF DIFFERENT STEEL GRADES

Generally, the welding of steel gets more challenging as the strength and carbon and alloy contents increase. Varying heating conditions and cooling rates cause microstructural changes in the weld's HAZ. This may result in brittle phases, such as coarse-grained martensite and bainite. Hydrogen's influence on the HAZ's properties gets more harmful as the steel's strength increases.

Often in repairs and maintenance, however, welding of challenging steels cannot be avoided. Also, constructive requirements may demand welding of high strength, heat-treated steels.

Careful planning and preparation as well as proper heat treatment possibilities in close proximity, are vital in successful welding of such steels. Welding instructions for the different steel groups are given in the following pages.

From a large selection of filler metals, products from ESAB and Lincoln are used in this manual. By using filler metal comparison charts, fillers from other manufacturers can be chosen.

In MAG-welding, EN ISO 14175 standardized gas grouping is used, so the correct gases can be chosen from the products of the desired supplier.

If the weld joint or welding performance has special requirements, filler metals that are different than mentioned can be used. In such special cases, it is recommended to consult the filler metal or steel provider.

Gas group	AGA	Woikoski	Composition
M12	MISON® 2*	SK-2	Ar + 2 % CO_2
	MISON® 2 He*		Ar + 2 % CO_2 + 30 % He
M13	CRONIGON® S2	S0-2	Ar + 2 % O_2
	CRONIGON® He	Awolight	Ar + 30 % He + 1 % O_2
M20	MISON® 8*	Awomix	Ar + 8 % CO_2
		SK-12	Ar + 12 % CO_2
M21	MISON® 18*	SK-18	Ar + 18 % CO_2
	MISON® 25*	SK-25	Ar + 25 % CO_2

*Contains also 0.03% NO

8.1 General structural steels

S235JR
S355J0

General structural steels are low carbon-, non-alloyed- or low manganese steels.

To ensure the fine-grained structure of the S355J0 grade steel, small amounts of niobium or vanadium can be alloyed to it.

Weldability of the general structural steels is high with all welding processes. However, in welding of high material thicknesses, the risk of cold cracking needs to be taken into account.

An increased working temperature is recommended in some of tables' cases.

Recommended consumables for general structural steels

MMA	
Steel grade	**Filler metal**
S235JR	OK 48.00
	OK Femax 33.80
	Conarc 48
	Ferrod 160T
S355J0	OK 48.00
	OK Femax 38.65
	Conarc 48
	Conarc V 180

MAG welding		
Steel grade	**Filler metal**	**Shielding gas**
S235JR **S355J0**	OK Aristorod 12.50	M21/M20 or CO_2
	OK Aristorod 12.63	M21/M20 or CO_2
	OK Tubrod 15.14	M21 or CO_2
	LNM 26	M21/M20 or CO_2
	LNM 27	M21/M20 or CO_2
	Outershield T55-H	M21/M20 or CO_2

Working temperatures for general structural steels

Steel grade and welding process	Combined thickness of the joint, mm	Working temperature, °C	Postweld heat treatment
S235JR			
MMA	-120	not increased	Stress relieving, if necessary
	120-	150-200	
MAG		not increased	
S355J0			
MMA	-60	not increased	Stress relieving, if necessary
	60-	150-200	
MAG	-90	not increased	
	90-	100-200	

Heat treatments for general structural steels

Treatment	Temperature, °C	Soaking time, hours	Cooling
Stress relieving	550-600	0.5-2	Slowly to 450 °C, after which cooling in air
Normalizing	900-930	0.5	In air

8.2 Machine steels

Ovako 520
16Mn5
22Mn5
Ovako 550

The Ovako's machine steels are further developed from general structural steels. They are available as round or square bars.

The Imatra machine steels are low carbon and low manganese alloyed steels (max. 1.5 % Mn). To ensure a fine-grained structure, small amounts of vanadium or niobium might be alloyed to the machine steels. Carbon equivalent CEV ≤ 0.43.

From their basic analysis and mechanical properties, they are equal to the grade S355J0. For the mechanical properties, the Ovako 520 meets the requirements for the S355J2. The steel grade Ovako 520 is comparable to the S355J0 in welding, so it is highly weldable.

Welding of the 16Mn5 has proven to be trouble-free, despite the high sulphur content. To prevent hot cracking in challenging welding constructions, welding is recommended to be done with low arc energy and a high manganese filler metal. Welding without a filler metal and with a narrow groove should be avoided.

The 22Mn5 sulphur content is the highest of machine steels and its susceptibility to hot cracking is good to keep in mind as early as in the designing phase. High heat input, narrow grooves and stiff structures should be avoided, in the welding of 22Mn5. The filler metal's dilution with the base material should be paid attention to, so the weld does not enrich in sulphur.

The Ovako 550 is similar to the Ovako 520 from its basic composition. However, the 550 is cold drawn until Ø 55 mm, which need to be taken into account in the planning of the weld and welding itself. The thicker Ø 60-120 mm bars are equivalent to the Ovako 520. The improved strength achieved with cold working decreases locally due to the welding's thermal effect. Nevertheless, the yield point is always over 350 N/mm^2.

Recommended consumables for machine steels

Steel grade	Rod	MAG	Shielding gas
Ovako 520	OK 48.00	OK Aristorod 12.50	M21/M20 or CO_2
	OK Femax 38.65	OK Aristorod 12.63	M21/M20 or CO_2
	Conarc 48	OK Tubrod 15.14	M21 or CO_2
	Conarc V 180	LNM 26	M21/M20 or CO_2
		LNM 27	M21/M20 or CO_2
		Outershield T55-H	M21/M20 or CO_2
16Mn5 **22Mn5**	OK 55.00	OK Autrod 12.51	M21/M20 or CO_2
	OK Femax 38.65	OK Autrod 12.64	M21/M20
	Conarc 49	OK Tubrod 15.14	M21
	Conarc V 180	LNM 26	M21/M20 or CO_2
		LNM 27	M21/M20
		Outershield T55-H	M21/M20
Ovako 550	OK 48.00	OK Aristorod 12.63	M21/M20 or CO_2
	OK Femax 38.65	OK Tubrod 15.14	M21 or CO_2
	Conarc 48	LNM 27	M21/M20 or CO_2
	Conarc V 180	Outershield T55-H	M21/M20 or CO_2

Working temperatures for machine steels

Welding process	Combined thickness of the joint, mm	Working temperature, °C	Postweld heat treatment
MMA	-60	not increased	Stress relieving, if necessary
	60-	150-200	
MAG	-90	not increased	Stress relieving, if necessary
	90-	150-200	

Heat treatments for machine steels

Treatment	Temperature, °C	Soaking time, hours	Cooling
Stress relieving	550-600	0.5-2	Slowly to 450 °C, after which cooling in air
Normalizing	900-930	0.5	In air

8.3 High strength structural steels

S400
S500/19MnV5
4CrMn16-4*

High strength structural steels are weldable, and they are available as flat bars.

The S400 has the guaranteed minimum yield point of 410 N/mm^2 and impact toughness of KV 27 J at -20 °C. Its weldability is comparable to the grade S355J2 and its carbon equivalent (CEV) is 0.37 on average.

As a strong but highly weldable steel, the S400 is well suited for structures and machine components as a supporting and stiffening part. Normally, the S400 is weldable without an increased working temperature or postweld heat treatment.

With using the S400, cost savings along with lighter and smaller structures can be achieved in comparison to ordinary structural steels.

The S500 is manufactured as a customer product. The strength and impact toughness are fitted to meet each case's requirements.

The 4CrMn16-4* is a low carbon, chromium alloyed steel, which gets its lath martensitic structure in cooling after the rolling. The yield point is at least 650 N/mm^2. In many cases, the 4CrMn16-4* is weldable without increasing the working temperature or performing postweld heat treatment.

Additional instructions for welding of the 4CrMn16-4* are given in pages 42-43. In welding of the high strength steels, the risk of cold cracking needs to be taken into account, see page. 16.

For the high strength steels, recommended cooling time t8/5 is 5-25 s. In effective heat input, it equals ca. 1-2 kJ/mm. The exact cooling time depends on the material's thickness, and it can be defined by using formulas in EN 1011-2 (2001) standard or by using graphs. If the cooling time is too short, the risk of cold cracking increases, and if the cooling time is too long, the impact toughness decreases.

Recommended consumables for high strength structural steels

Steel grade	Rod	Notes
S400	OK 48.00	OK 48.00 and Conarc 48 are non-alloyed filler rods. Using them results in a weld with a lower strength than the base material
	OK Femax 38.65	
	OK 55.00	
	Conarc 48	
	Conarc V 180	
	Conarc 49	
S500/19MnV5	OK 48.00, undermatching	
	OK 74.78	
	Conarc 48	
	Conarc 60G	
4CrMn16-4*	OK 48.00, undermatching	
	OK 75.75	
	Conarc 48	
	Conarc 80	

Steel grade	MAG	Shielding gas	Notes
S400	OK Aristorod 12.50	M21/M20 or CO_2	
	OK Aristorod 12.63	M21/M20 or CO_2	
	OK Tubrod 15.14	M21 or CO_2	Flux-cored wire
	LNM 26	M21/M20 or CO_2	
	LNM 27	M21/M20 or CO_2	
	Outershield T55-H	M21/M20 or CO_2	Flux-cored wire
S500	OK Autrod 12.64	M21/M20	Undermatching
	OK Tubrod 14.12	M21	Flux-cored wire, under-matching
	LNM 27	M21/M20	
	Outershield T55-H	M21/M20	Flux-cored wire
4CrMn16-4*	OK Autrod 12.51	M21/M20	Non-alloyed filler wire, undermatching
	OK Autrod 12.64	M21/M20	Non-alloyed filler wire, undermatching
	OK Aristorod 13.12	M21/M20	
	OK Aristorod 13.29	M21/M20	
	LNM 26	M21/M20	Non-alloyed filler wire, undermatching
	LNM 27	M21/M20	Non-alloyed filler wire, undermatching
	LNM 19	M21/M20	
	LNM MoNiVa	M21/M20	

Working temperatures for high strength structural steels

Steel grade and welding process	Combined thickness of the joint, mm	Working temperature, °C	Postweld heat treatment	Notes
S400				
MMA	-60	Not increased		
	60-	100-200	Stress relieving, if necessary	
MAG	-90	Not increased	Stress relieving, if necessary	
	90-	100-200		
S500				
MMA	-20	Not increased		
	20-	100-200	Stress relieving, if necessary	
MAG	-30	Not increased	Stress relieving, if necessary	
	30-	100-200		
4CrMn16-4*				
MMA	-40	Not increased		In stress relieving, the steel's strength slightly decreases
	40-	100-200	Stress relieving, if necessary	
MAG	-60	Not increased	Stress relieving, if necessary	
	60-	100-200		

Heat treatments for high strength structural steels

Treatment	Temperature, °C	Soaking time, hours	Cooling	Notes
S400, S500				
Normalizing	900-930	0.5-1	Slowly to 450 °C, after which cooling in air	
Stress relieving	550-600	1-2		
Quenching and tempering				
-hardening	920-950	0.5-1	Quenching in water	
-tempering	400-460	0.5-1	In air	Tempering is not mandatory
Normalizing	930-960	0.5-1	In air	
Stress relieving	400-600	2	In air	In stress relieving, the steel's strength slightly decreases

8.4 Quenching and tempering steels

C45
25CrMo4
42CrMo4
34CrNiMo6
4CrMn16-4

Quenching and tempering steels are made for heat treating, or quenching and tempering. Therefore, they have a higher carbon content than weldable structural and machine steels, between 0.22 and 0.50 %. To improve hardening abilities, the quenching and tempering steels are alloyed with manganese, chromium, nickel, and molybdenum. Basically, they all affect welding negatively.

Using the IIW's formula, the quenching and tempering steels' carbon equivalent varies between CEV = 0.5-1.1 (even though the formula is not meant for estimating the weldability of such steels).

The 4CrMn16-4 is exception. Due to its low carbon content, ca. 0.05 %, the 4CrMn16-4's microstructure is lath martensitic.. Unlike a conventional plate martensite, the lath martensite is comparatively soft and tough, making it highly weldable. The Ovako's quenching and tempering steels are M-treated to ensure a machinability that is as high as possible. The M-treatment does not affect steel's weldability.

8.4.1 Welding of quenching and tempering steels

The use of quenching and tempering steels in welded structures should usually be avoided. Its comparatively high carbon content and alloying may cause hardening and cracking in the welding. In some cases welding cannot be avoided, like in the repair of a broken structure or when there are constructional requirements. The welding's success often depends on how well the following can be fit together: steel's behavior, structure's rigidity and postweld heat treatment.

Almost always, the welding of quenching and tempering steels requires an increased working temperature, usually 150-400 °C. The recommended practice (particularly if the carbon content is more than 0.35 %) is to choose the working temperature above the M_s –temperature, or slightly over 350 °C, and then maintain the temperature at least for an hour after the welding.

Then austenite decomposition in the weld leads to softer microstructures, lowering the cracking risk without significantly lowering the strength.

Usually the weld needs to be heat treated. Quenching and tempering is the most recommended treatment. The treatment is most profitable to do right after the welding before it cools down. If quenching and tempering after the welding is not possible, a stress relief needs to be done.

The stress relieving temperature needs to be chosen slightly under the material's original tempering temperature (usually 550-650 °C) so the strength does not decrease. Annealing needs to be done as soon as the weld cools down to 100 °C, so the austenite decomposition is complete. Sometimes, annealing is not possible right after, and the workpiece is often sitting at room temperature for long periods of time before the annealing.

The weld's cooling needs to be slowed down (for example, by covering it with mineral wool) and it must be protected from draughts.

Welding is always safer to perform on a soft annealed base material than on a quenched and tempered base material. The filler metal needs to be selected so that the weld gets the desired strength after the quenching and tempering. Nowadays, selecting the filler metal for steels that are already quenched and tempered and receive only stress relief after the welding, is not difficult anymore.

Filler metal manufacturers have developed rods suited especially for quenching and tempering steels, such as OK 75.75, Conarc 80 and OK 78.16. Also, rods for heat resistant steels, for example OK 76.18, can be used for quenching and tempering steels.

To prevent cold cracking, the rods need to be dried before welding. The recommended drying temperature is 350 °C and the drying time should be at least two hours.

If the joint's strength does not have special requirements, it is often more beneficial to weld quenched and tempered base materials with austenitic stainless steel rods, or over-alloyed rods. Such rods are, for example, OK 67.45, Arosta 307, OK 67.70, Arosta 309Mo, OK 68.82 and Wearshield BU-30. Equivalent wires are, for example, OK Autrod 16.95, LNM 307, 309LSi, LNM 309LSi and 312. In these cases, welding of the 25CrMo4 can be done even without increasing the working temperature.

The upside of austenitic filler metals is their lower susceptibility to cold cracking. Hydrogen is more likely to dissolve in austenite than in ferrite, making the hydrogen stay in the austenitic weld and prevent cold cracking in the HAZ. The yield point of the austenitic welds varies between 400 N/mm^2 and 600 N/mm^2.

One way to ease the joining of quenching and tempering steels, or other low weldability steels, to high weldability steels is to

use buttering weld. Before the actual weld, a deposition is welded to the junction with a non-alloyed filler metal. The deposition weld can also be heat treated, if necessary. After the deposition weld, the actual welding is performed. The joint's reliability can be further increased by stress relieving the structure.

Welding of the quenching and tempering steels always requires special attention. A correct weld placement to reduce the structure's rigidity is important, as well as adequate heat treatment equipment near the work area. Usually, the weld's quality should be verified with tests.

8.4.2 Welding of the 4CrMn16-4

Unlike conventional quenching and tempering steels, the 4CrMn16-4 is highly weldable, even after it is quenched and tempered. It can be welded with the conventional welding processes and consumables. In MMA welding, both non-alloyed and alloyed rods can be used, for example, non-alloyed OK 48.00 or Conarc 48 and alloyed OK 75.75 or Conarc 80. The rods must be dried thoroughly before welding.

Using non-alloyed fillers results in a lower strength, but the joint's toughness is better than with alloyed fillers.

An increased working temperature is usually not necessary, but in challenging welds, it is recommended.

4CrMn16-4 does not require postweld heat treatments.

Low penetration is typical for the 4CrMn16-4. When the 4CrMn16-4 is welded to a lower strength steel, the penetration difference needs to be taken into account. Due to the 4CrMn16-4's high chromium content, it has a chromium oxide layer on its surface, reducing the penetration.

Equal penetration can be achieved by directing the rod so that more thermal effect goes to the 4CrMn16-4 (Figure 18). A high enough heat input must be used to ensure adequate penetration. The simplest way to get a high enough heat input is to select the highest values for current from electrode recommendations table.

Of course there are other factors that affect the penetration, such as correct travel speeds, root gaps, and rod sizes in relation to a groove angle.

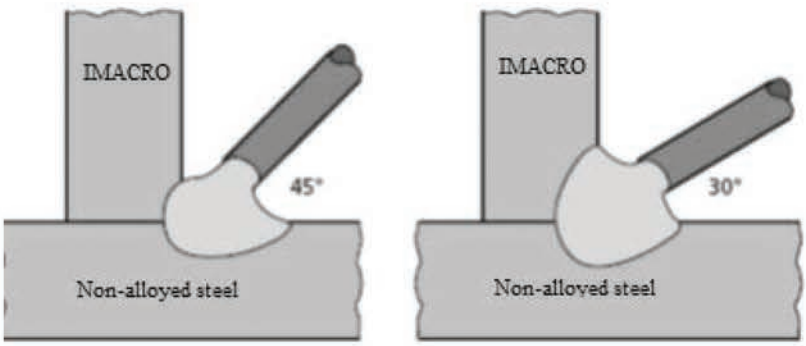

Figure 18 – To achieve equal penetration in welding of the 4CrMn16-4 (Imacro) to a non-alloyed steel, the rod is directed more towards the 4CrMn16-4 (Imacro).

Recommended consumables for quenching and tempering steels

Steel grade	Rod	Notes
C45	OK 48.00	Non-alloyed rod (soft)
	OK 74.78	
	Conarc 48	Non-alloyed rod (soft)
	Conarc 60G	
25CrMo4 **42CrMo4** **34CrNiMo6**	OK 48.00	Non-alloyed rod (soft)
	OK 75.75	
	OK 78.16	
	OK 67.45	Austenitic stainless rod
	OK 67.70	
	OK 68.82	
	Conarc 48	Non-alloyed rod (soft)
	Conarc 80	
	Arosta 307	
	Arosta 309Mo	
	Limarosta 312	
4CrMn16-4 (Imacro M)	OK 48.00	Non-alloyed rod (soft)
	OK 75.75	
	Conarc 48	Non-alloyed rod (soft)
	Conarc 48	

Recommended consumables for quenching and tempering steels

Steel grade	MAG	Shielding gas	Notes
C45	OK Aristorod 12.63	M21/M20 or CO_2	Non-alloyed filler wire (soft)
	OK Tubrod 15.14	M21 or CO_2	Non-alloyed filler wire (soft)
	LNM 27	M21/M20 or CO_2	Non-alloyed filler wire (soft)
	Outershield 70-H	M21/M20 or CO_2	Non-alloyed filler wire (soft)
25CrMo4 **42CrMo4** **34CrNiMo6**	OK Aristorod 12.50	M21/M20 or CO_2	Non-alloyed filler wire (soft)
	OK Aristorod 13.12	M21/M20 or CO_2	
	OK Aristorod 13.29	M21/M20 or CO_2	
	OK Tubrod 14.03	M21	Flux-cored wire
	OK Autrod 309LSi	M12/M13	Austenitic stainless wire
	OK Autrod 16.95	M12/M13	Austenitic stainless wire
	LNM 27	M21/M20 or CO_2	
	LNM 19	M21/M20 or CO_2	
	LNM MoNiVa	M21/M20 or CO_2	
	Outershield 690-H	M21	Flux-cored wire
	LNM 309LSi	M12/M13	
	LNM 307	M12/M13	
4CrMn16-4 (Imacro M)	OK Autrod 12.51	M21/M20 or CO_2	Non-alloyed filler wire (soft)
	OK Aristorod 13.12	M21/M20 or CO_2	
	OK Aristorod 13.29	M21/M20 or CO_2	
	OK Tubrod 14.03	M21	Flux-cored wire
	LNM 26	M21/M20 or CO_2	Non-alloyed filler wire (soft)
	LNM 19	M21/M20 or CO_2	
	LNM MoNiVa	M21/M20 or CO_2	
	Outershield 690-H	M21	Flux-cored wire

Working temperatures for quenching and tempering steels

Steel grade and welding process	Combined thickness of the joint, mm	Working temperature, °C	Postweld heat treatment	Postweld heat treatment
C45				
MMA	-20	50-100		
	20-	150-200	Stress relieving Quenching and tempering Normalizing	
MAG	-20	Not increased		
	20-	150-200	Stress relieving Quenching and tempering Normalizing	
25CrMo4				
MMA		150-200	Stress relieving Quenching and tempering	The weld is softer than the base material
Austenitic stainless filler metal	-20	50-100		
	20-	150-200		
MAG	-20	50-100	Stress relieving Quenching and tempering	
	20-	150-200		

25CrMo4, 42CrMo4, 34CrNiMo6				
MMA				
MAG		370-420	Stress relieving Quenching and tempering	The working temperature has to be maintained 1-2 hours after the welding, unless the workpiece is quenched and tempered
Austenitic stainless filler metal		370-420		The weld is softer than the base material
4CrMn16-4 (Imacro)				
MMA	-40	Not increased	Stress relieving, if necessary	In stress relieving, the steel's strength slightly decreases
	40-	100-200		
MAG	-60	Not increased	Stress relieving, if necessary	
	-60	150-200		

Heat treatments for quenching and tempering steels

Treatment	Temperature, °C	Soaking time, hours	Cooling	Notes
C45				
Normalizing	840-870	0.5-1	In air	
Quenching and tempering				
-hardening	880-920	0.5-1	Quenching in water or oil	
-tempering	550-660	1-2.5	In air	
Stress relieving	450-650	2	Slowly to 450 °C, after which cooling in air	
25CrMo4				
Quenching and tempering				
-hardening	840-880	0.5-1	Quenching in oil	
-tempering	540-680	1-2.5	In air	
Stress relieving	450-650	2	Slowly to 450 °C, after which cooling in air	
42CrMo4, 34CrNiMo6				
Quenching and tempering				
-hardening	820-850	0.5-1	Quenching in oil	
-tempering	540-680	1-2.5	In air	
Stress relieving	450-650	2	Slowly to 450 °C, after which cooling in air	
4CrMn16-4				
Quenching and tempering				
-hardening	920-950	0.5-1	Quenching in water	
-tempering	400-460	1-2.5	In air	Tempering is not mandatory
Stress relieving	450-600	2	In air	In stress relieving, the steel's strength slightly decreases

8.5 Case hardening steels

20NiCrMo2-2
16MnCr5
20MnCr5
17NiCrMo6-4
18NiCrMo7-6

Alloyed case hardening steels are similar to quenching and tempering steels but their carbon content is lower, 0.15-0.25 %. Their weldability in mill state or after soft annealing is comparable to the 25CrMo4.

Just like the welding of quenching and tempering steels, welding of the case hardening steels requires caution.

The carbon content of a case hardened surface is about 0.7%. Due to this the risk of cold cracking in the welding of such an object is very high, and it is best that the welding is performed before the case hardening.

If the welding is done after the case hardening, the weld area must be protected from carbonization or the carbonized layer must be removed from the weld area.

If the welding is done before the case hardening and the weld also needs to be case hardened, the filler metal needs to be selected so it is suitable for case hardening. Such filler metals are, for example, OK 78.16 or Kryo 3.

Recommended consumables for case hardening steels

Steel grade	Rod	Notes
All grades	OK 74.78	
	OK 75.75	
	OK 78.16	Suitable for case hardening
	OK 67.45	Austenitic stainless filler rod
	OK 67.70	Austenitic stainless filler rod
	OK 68.82	Austenitic stainless filler rod
	Conarc 60G	
	Conarc 80	
	Kryo 3	Suitable for case hardening
	Arosta 307	Austenitic stainless filler rod
	Arosta 309Mo	Austenitic stainless filler rod
	Limarosta 312	Austenitic stainless filler rod

Steel grade	Rod	Notes
All grades	OK Aristorod 13.12	M21/M20 or CO_2
	OK Aristorod 13.29	M21/M20 or CO_2
	OK Tubrod 14.03	M21
	OK Autrod 309LSi	M12/M13 Austenitic stainless
	OK Autrod 16.95	M12/M13 Austenitic stainless
	LNM 19	M21/M20 or CO_2
	LNM MoNiVa	M21/M20 or CO_2
	Outershield 690-H	M21
	LNM 309LSi	M12/M13
	LNM 307	M12/M13

Working temperatures for case hardening steels

Welding process (for all case hardening steels)	Combined thickness of the joint, mm	Working temperature, °C	Notes
MMA		150-200	The weld is softer than the base material
Austenitic stainless filler metal	-20	50-100	
	20-	150-200	
MAG	-20	50-100	
	-20	150-200	

8.6 Boron steels

20MnB4
27MnCrB5-2
30MnB5
38MnB5

Boron is an alloy which strongly increases steels hardenability. It is alloyed in small amounts – 0.003 % on average. Other alloys can be replaced with boron, and with it, the steel's carbon content can be lowered without decreasing the hardening abilities.

Boron steels' composition is profitable for welding. Ovako boron steels have relatively high weldability with their carbon content being around 0.2-0.3%. On the other hand, the 38MnB5´s carbon content is 0.4%, and it is significantly harder to weld.

Boron steels can be welded in either an unhardened or hardened state. The unhardened (in mill state) boron steels are rather soft, which is beneficial for welding stresses.

The structures welded in an unhardened state are either hardened or quenched and tempered after the welding.

In the welding of boron steels, the same general factors as in the welding of high strength steels need to be taken into account.

The given consumable recommendations lead to a weld that is slightly softer than the base material.

If the boron steels are used for rather simple objects or structures, the working temperatures can be selected from table's lower end.

In challenging and rigid structures, the working temperature needs to be higher.

Condition and welding process	MMA & MAG	Shielding gas
Hot rolled/Unhardened	OK 55.00	
MMA	Conarc 49	
MAG	OK Aristorod 12.63	M21/M20 or CO_2
	LNM 27	M21/M20 or CO_2
Hardened	OK 74.78	
MMA	Conarc 60G	
MAG	OK Aristorod 13.12	M21/M20 or CO_2
	LNM 19	M21/M20 or CO_2

Working temperatures for boron steels

Steel grade and welding process	Combined thickness of the joint, mm	Working temperature for simple objects, °C	Working temperature in challenging cases and rigid structures, °C	Capacity after processing
20MnB4				
MMA	-15	Not increased	Not increased	
	15-30	Not increased	150-200	
	30-	50-100	150-200	
MAG	-20	Not increased	Not increased	
	20-	Not increased	150-200	
27MnCrB5-2				
MMA	-20	Not increased	150-200	
	-20	50-100	150-200	
MAG	-30	Not increased	150-200	
	30-	50-100	150-200	
30MnB5				
MMA	-15	Not increased	Not increased	
	15-	100-200	150-200	
MAG	-30	Not increased	150-200	
	30-	50-100	150-200	
38MnB5				
MMA and MAG		370-420*	370-420*	The hardness of the hardening steel drops to around 47 HRC

* Working temperature is maintained 2 hours after the welding

8.7 Spring steels

40Si7
55Si7
51CrV4

As given by their name, spring steels are designed to be material for springs. They are often used in other applications as well, for example, in wear and structural parts of farm machinery.

Often in repairs and maintenance work, problems in the welding of spring steels are faced. Nevertheless, spring steels must not be used in supporting structures.

The Ovako spring steel grades 40Si7 and 55Si7 are silicon-manganese alloyed. The 51CrV4 is chromium-vanadium alloyed. Hardenability of the steels increases in the order mentioned above.

The grades 55Si7 and 51CrV4 have such a high hardenability, that their welding is not recommended.

The 40Si7's carbon content is about 0.4%, and it is not very highly alloyed, making it weldable within certain limits.

Sometimes, for example in repairs, it might be necessary to weld the easily hardening spring steels 55Si7 or 51CrV4. If the joint's strength is not a substantial factor, for example in the welding of a fitting, the welding can be done using an austenitic filler metal. Cooling needs to be done slowly.

In welded structures that require high strength or high abrasion resistance, it is recommended to use high strength structural steels or boron steels.

Recommended consumables for spring steels

Steel grade and welding process	MMA and MAG	Shielding gas	Notes
40Si7			
MMA	OK 55.00		Non-alloyed filler rod
	OK 75.75		
	Conarc 49		Non-alloyed filler rod
	Conarc 80		
MAG	OK Autrod 12.64	M21/M20 or CO_2	Non-alloyed filler wire
	OK Aristorod 13.12	M21/M20 or CO_2	
	LNM 27	M21/M20 or CO_2	
	LNM 19	M21/M20 or CO_2	
55Si7, 51CrV4			
MMA	OK 67.45		Austenitic stainless filler rod
	OK 67.70		Austenitic stainless filler rod
	OK 68.82		Austenitic stainless filler rod
	OK 75.75		
	Arosta 307		Austenitic stainless filler rod
	Arosta 309Mo		Austenitic stainless filler rod
	Limarosta 312		Austenitic stainless filler rod
	Conarc 80		
MAG	OK Autrod 309L	M12/M13	Austenitic stainless filler rod
	OK Autrod 16.95	M12/M13	Austenitic stainless filler rod
	LNM 309LSi	M12/M13	Austenitic stainless filler wire
	LNM 307	M12/M13	Austenitic stainless filler wire

Working temperatures for spring steels

Steel grade	Working temperature, °C	Postweld heat treatment	Notes
40Si7	100-200	Stress relieving, if necessary	
55Si7 **51CrV4**	600-650	Quenching and tempering, if possible	Slow cooling from the working temperature

Heat treatments for spring steels

Treatment	Temperature, °C	Soaking time, hours	Cooling
40Si7, 55Si7			
Quenching and tempering			
-hardening	850-870	0.5	Quenching in water
-tempering	450-650	0.5-1	In air
Stress relieving	400-600	1-2	Slowly to 450 °C, after which cooling in air
51CrV4			
Quenching and tempering			
-hardening	830-890	0.5	Quenching in water
-tempering	450-650	0.5-1	In air
Stress relieving	400-600	1-2	Slowly to 450 °C, after which cooling in air

9 – REPAIR WELDING OF PROBLEM STEELS

In repairs and maintenance works, it is sometimes necessary to weld steels that are not meant for it. They might have low weldability because of their composition or strength, or sometimes even their origin might be unclear. Conditions are often unfavorable for welding. Objects and structures might be so large that heat treating them is not possible.

Such weldable objects can be, for example, machine parts such as gears and axles, wear parts, or tools.

In this brochure, the term “problem steel” refers, for example, to high carbon, quenching and tempering, spring, case hardening, and abrasion resistant steels. In the chapter “Examples of welding the Ovako steels” some cases like these are covered.

The first thing to do in the welding of a problem steel is to sort out its weldability. It is simple to do if information about the structure’s composition or strength is available, for example, through a drawing or material certificate. The composition and strength of an unknown material can try to be clarified through tests such as a spark- or hardness test. In critical cases, the analysis should be done, for example, from a sample piece.

If the object’s composition is such that its welding is covered earlier in steel grade specific instructions, those instructions should be followed when possible.

The filler metal should be selected so that it contains the least amount of diffusible hydrogen as possible and is tougher than the base material, which reduces stresses in the base material’s HAZ.

With using dried non-alloyed base rods, a rather tough and soft weld can be achieved. With non-alloyed rods, an increased working temperature should be used when possible.

For several years in repair welding of these steels, welding has been done with austenitic stainless filler metals, which has been found to be an excellent method. Heat treatments are usually not necessary due to a lower risk of cold cracking and tougher weld metal. As for such repairing filler metals, many different austenitic or austenitic-ferritic alloys have been used.

The biggest benefit of an austenitic filler is its ability to dissolve most of the hydrogen in the filler-base material mix while avoiding diffusion into the HAZ where martensite has formed. The filler metal’s composition is designed so that a high amount of ferrite can be alloyed to the weld metal without forming a microstructure that is prone to cracking.

The most common type of filler metal in repair welding is 29 % Cr -9 % Ni, and its composition leads to an austenitic-ferritic structure. The weld metal’s yield point is about 600 N/mm^2, ultimate strength is about 700 N/mm^2 and hardness is about 250 HB. Such filler metals are, for example, OK 68.81, OK 68.82 and Limarosta 312 (see table below).

Naturally, using an austenitic or austenitic-ferritic filler metal does not prevent the possibility of the base material’s HAZ from hardening. An increased working temperature reduces the risk of it happening but it worsens the weld material’s properties. Usually the welding is done cold.

The most commonly used filler metals in repair welding

18Cr/8Ni/6Mo	OK 67.45, OK Autrod 16.95, Tubrodur 200 O D
	Arosta 307, LNM 307
23Cr/13Ni	OK 67.60, OK Autrod 309LSi, Shield-Bright 309L X-tra
	Limarosta 309S, LNM 309LSi, Cor-A-Rosta 309L
3Cr/13Ni/3Mo	OK 67.60, OK Autrod 309MoL, Shield-Bright 309LMo X-tra
	Arosta 309Mo, Cor-A-Rosta 309MoL
29Cr/9Ni	OK 68.81 and 68.82, OK Autrod 312
	Limarosta 312
65Ni/15Cr-Fe-Mn	OK 92.26, OK Autrod 19.85
	NiCro 70/15Mn, NiCro 70/19

10 – JOINT WELDING OF NON-ALLOYED AND STAINLESS STEEL

The joint between a non-alloyed and stainless steel is usually welded with a so called over-alloyed stainless filler metal. The over-alloyed filler has a higher chromium and nickel content, so it can dilute to a non-alloyed steel without ruining the weld metal's qualities.

The filler metal is selected so the following harmful effects won't develop: cold cracking, ferrite grain growth, sigma brittleness or hot cracking.

In the selection of a filler metal, the Schaeffler diagram shown in Figure 20 can be used as an aid. It presents the steel's microstructure's dependence on its Cr- and Ni-equivalents.

The previously mentioned harmful effects can be avoided by selecting the filler so that the weld material's microstructure is on the bolded area of Figure 20. In addition to the base material's composition, the filler metal's composition and dilution ratio affect the selection. The dilution ratio tells how much of the base material is mixed into the weld metal. Typical dilution ratios for the different processes are:

Pulsed-MIG/MAG	10-20%
MIG/MAG	20-30%
MMA	20-35%
TIG	20-60%
SAW	40-70%

The given values are approximations since pre-heating, groove shape, material thickness, filler material diameter, welding current, polarity, arc voltage, travel speed and arc alignment along with the weld process affect the dilution ratio.

The forming microstructure can be found on the line that is connecting the midpoint of the base materials' connecting line and the location of the filler metal, when the dilution ratio is known.

Non-alloyed and stainless steel can be welded together by using an over-alloyed filler for the whole groove, or by using buttering welding. By welding a buttering layer, using an over-alloyed filler metal, onto the non-alloyed groove surface, the rest of the weld can be done using a filler metal matching the base material, Figure 19.

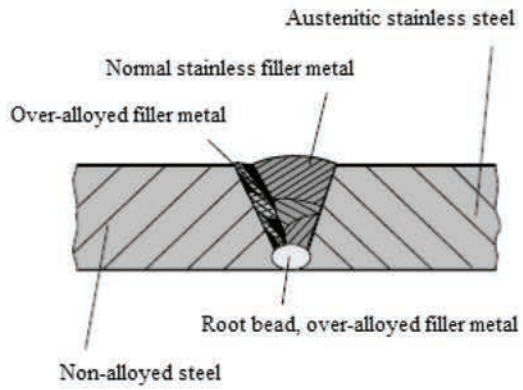

Figure 19 – The joint of non-alloyed and stainless steel using buttering weld

The most commonly used filler metals are so called over-alloyed type:

23Cr/13Ni/3Mo	OK 67.70	Arosta 309Mo
23Cr/13Ni	OK 67.75	Limarosta 309S
18Cr/8Ni/6Mo	OK 67.45	Arosta 307
29Cr/9Ni	OK 68.82	Limarosta 312

10.1 Example of use

A high strength structural steel, S400, and an acid resistant steel 18/12/3 (AISI 316) are welded together. Let us take a closer look at the filler metals OK 48.00, OK 63.30 and 67.70. The first one's composition is similar to a structural steel, the second one is similar to an acid resistant steel, and the third one is a so called over-alloyed filler metal.

Even though this example is about a "basic" high strength structural steel, S400, the same approach and results also apply to most non-alloyed and low-alloyed steels.

In the Schaeffler diagram, points 1 and 2 represent the base materials' Cr- and Ni-equivalents, and points 3, 4 and 5 represent the equivalents to the filler metals mentioned previously mentioned, respectfully.

When the line's (1,2) midpoint is connected to points 3, 4 and 5, it can be seen that the filler OK 48.00 does not hit the triangle in the middle of diagram. This results in a martensitic microstructure that is hard, brittle and susceptible to cracking.

Using the filler metal OK 63.30, the dilution ratios 0-25 % hit the triangle, and with the filler metal OK 67.70, the dilution ratio is 15-40 %.

It can be seen that with the rod OK 67.70, the harmful microstructures can be avoided. Using the rod OK 63.30 might lead to harmful microstructures, and the result is not reliable.

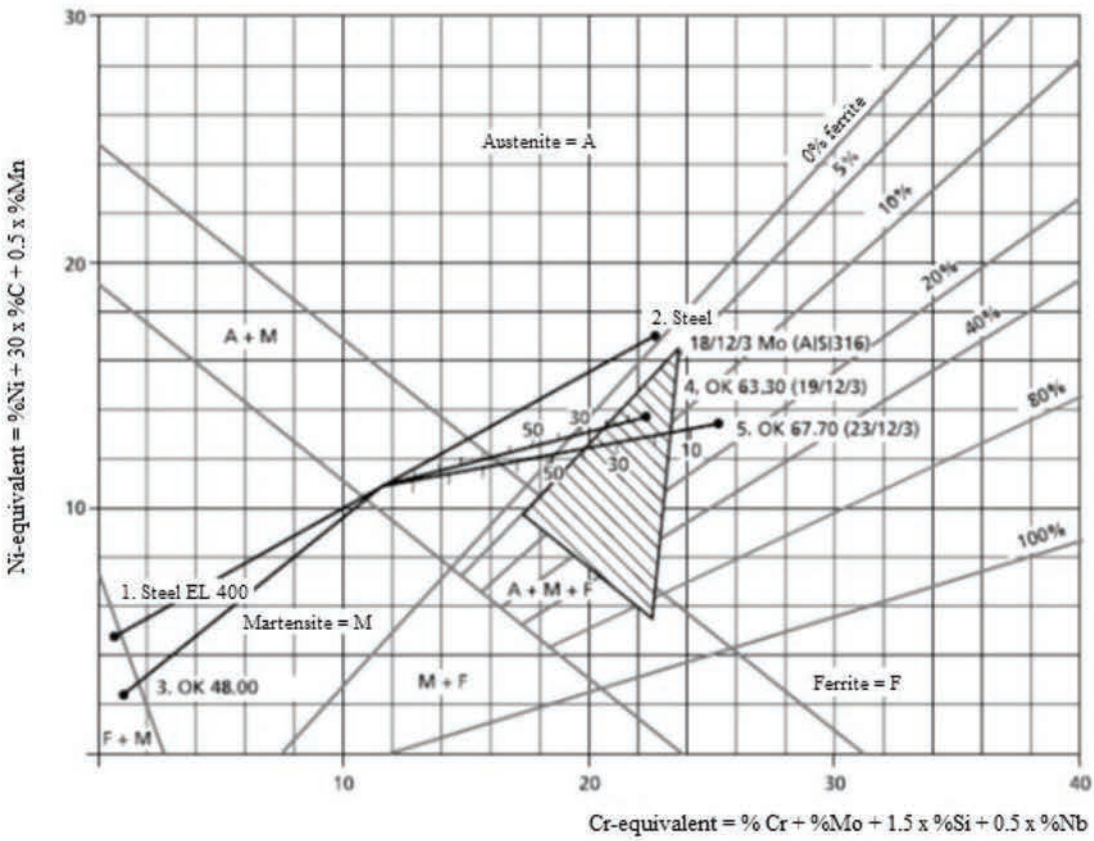

Figure 20 – Schaeffler's diagram

11 – HARDFACING

Hardfacing is a process where worn surfaces or surfaces under high wear are surfaced with a filler metal, resulting in a surface that is as or more durable than the structure's original material. The method is used both to repair old structures and make new ones. The purposes of hardfacing are:

- Return the original dimensions to a worn object so that the renewed object's service life may be as long as the original's.
- To ease manufacturing of complex objects. Structures that are difficult to make entirely from a wear-resistant alloy can be made from a steel that is easier to handle, and then parts requiring the special qualities can be hardfaced.

There are several types of hardfacing rods and wires with varying features. The selection is usually made based on the prevailing wear, weld metal's hardness and wear resistance.

In addition, the weld metal's tempering, corrosion, and flaking resistance, etc. need to be taken into account.

Often, the same object is exposed to several wear mechanisms which set contradictory requirements for the material. For example, high abrasion resistance is difficult to combine with high toughness and good thermal and corrosion resistance. This is why there are numerous different hardfacing materials on the market and why some properties have to be compromised in order to achieve others. Some of the hardfacing materials are combinations of several feature requirements.

Table 2 gives a general image of the properties of some hardfacing filler metals. In the standard EN 14700 (2014), different filler metals and their suitability for different wear situations are covered more precisely.

During the welding, it is usually recommended to keep the weld object's temperature, working temperature, between 200 °C and 500 °C to prevent cracking in the weld metal. Instructions for selecting the working temperature can be found from catalogs provided by the filler metal supplier.

In welding over non-alloyed steels, dilution needs to be kept in mind. The desired hardness cannot be achieved on the weld's first layer.

In repair welding of tools and some machine components, problems may occur. Structural materials are usually hardened and often harden easily. First it is always safer to sort out the material's composition, hardness and possible heat treatment before the welding. Then define the welding circumstances: correct working temperature, suitable annealing method to make the structure weldable, possible postweld heat treatment, or welding technique, for example, skip welding.

The weld object's size is an important factor in defining the working temperature. Small objects heat up enough from the arc energy, sometimes even turning red hot. In this case, the object should be left to cool down before continuing the welding because welding when the workpiece is too hot may lead to a decreased hardness and impact toughness.

Table 2. Filler metals for hardfacing

LOW	← ABRASION RESISTANCE →	HIGH
Mn-steels OK 13Mn OK 86.28 OK 86.30 OK Tubrodur 13Mn O/G OK Tubrodur 15CrMn O/G Wearshield Mangjet (e) Wearshield 15CrMn Lincore M Lincore 15CrMn	**Martensitic steels** 30-50 HRC: OK 83.27, OK 86.28, OK Weartrode 30 HD, OK Autrodur 38 G M, OK Tubrodur 35 O M, OK Tubrodur 35 S M, OK Tubrodur 40 O M, Wearshield BU-30, Wearshield MM 40, Lincore 33, Lincore 40-O >50 HRC: OK Weartrode 50, OK Weartrode 60, OK Weartrode 55 HD, OK Tubrodur 58 O/G M, OK Autrodur 58 G M, OK Autrodur 56 G M, OK Tubrodur 35 S M, Wearshield MM, Wearshield MI, Lincore 55	**Carbide alloys** OK Weartrode 62 OK Tubrodur 15.80 OK Tubrodur 15.81 Wearshield 50 MC Wearshield 60 (e) Wearshield 70 Lincore M Lincore 65-O
LOW ↑ HEAT AND CORROSION RESISTANCE ↓ HIGH	**Carbide alloys** OK 84.42 OK 84.52 OK Tubrodur 13Cr G Wearshield 420 Lincore 420	**Carbide alloys** OK Weartrode 60 T OK Weartrode 65 T OK Tubrodur 55 O A Wearshield ME Wearshield 44 Lincore 60-O
	Austenitic steels OK 67.45, OK 67.52, OK 68.81, OK 68.82, Arosta 307, Jungo 307, Limarosta 312, Wearshield ABR OK Autrod 16.95, OK Tubrodur 200 O D, Wearshield MM, Lincore 50, LNM 307	**Tool steels** OK Tooltrode 60 Wearshield T & D Lincore T & D
Ni-based OK NiCrFe-3 (OK 92.26) OK NiCrMo-5 (OK 92.35) OK NiCr-3 OK Autrod 19.82 NiCro 70/15Mn NiCroMo 59/23 NiCro 70/19		**Co-based** OK Tubrodur 15.86
HIGH	← ABRASION RESISTANCE →	LOW

12 – EXAMPLES OF WELDING THE OVAKO STEELS

In the selection of the following examples, the goal was to represent different welding problems and their solutions on a wide scale. All of the examples have been implemented in real life, but the best result is not necessarily the one shown in these examples. One purpose of these examples is to give ideas and stimulate the development of even more functional weld joints.

Some of the examples are purely maintenance cases, where the base material selection might be poor for welding. Although estimating the weldability is a part of the material selection process, these examples should be viewed critically and they should not be used to guide the material selection.

The steels' properties and their use are covered more precisely on Ovako's Material Data Sheets, found in the Steel Navigator.

The design and a stress analysis of the weld joints are covered in several books and articles. The welding of pressure vessels must be performed following the rules and regulations given by the authorities and standards. Steel's most common groove shapes and their design are introduced in standard EN ISO 9692-1 (2013).

In addition to instructions for each steel grade, the following general welding rules should be taken into account:

- Particularly in welding of high strength steels and rigid structures, the selected filler metal should be slightly softer than the base material, or as hard at the most.
- Usually, in welding of two different grades of steel together, the filler metal should be selected to match the base material with the lower strength.
- In the welding of different steel grades together, the working temperature is based on the combined material thickness with the assumption that the whole structure is made of the more hardening steel.
- In the welding of hardened steels, exceeding the working temperature of 200 °C causes the structure to soften, and temperatures from 200 °C to 350 °C decrease toughness.
- In critical cases, the working temperature should be maintained for 1-2 hours after the welding to make sure the hydrogen has enough time to leave the weld and base material's HAZ.
- Particularly in rigid structures, it is recommended to perform a stress relief. A correctly done stress relief reduces residual stresses, improves the weld's fatigue strength and toughness, and ensures permanency of the dimensions in machining and use.
- Normalization, quenching and tempering, or some other suitable heat treatment can also be used as a postweld heat treatment. The normalization particularly improves the impact toughness Sin ce the quality of the weld is always a sum of several factors, the responsibility of the weld's success lies on all: designer, welder and supervisor.

12.1 Flange axle

	Structural materials	
	Flange	**Axle**
A	Machine steel Ovako 520	Machine steel Ovako 520 or cold drawn machine steel Ovako 550
B	Machine steel Ovako 520	Quenching and tempering steel 25CrMo4
C	Case-hardening steel 20NiCrMo2-2	Quenching and tempering steel 25CrMo4

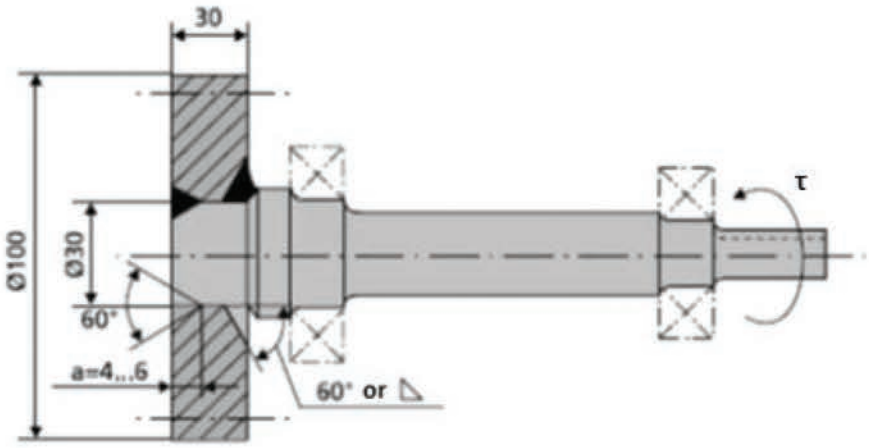

	Consumables		Working temperature	Heat treatments
A	Rod	OK 48.00	A flange axle dimensioned like above, can be welded without increasing the working temperature. With higher material thicknesses, the need for an increased working temperature is determined by the combined thickness of the joint.	Axle can be case hardened.
		Conarc 48		
	Wire	OK Autrod 12.51		
		LNM 26		
	Shielding gas	M21/M20 or CO_2		
B	Rod	OK 74.78	150-200 °C	Stress relieving 550-600 °C
		Conarc 60G		
	Wire	OK Aristorod 13.12		
		LNM 19		
	Shielding gas	M21/M20 or CO_2		

C	Rod	OK 74.78	200-250 °C	Case hardening of the flange before the welding
		Conarc 60G		
	Wire	OK Aristorod 13.12		
		LNM 19		
	Shielding gas	M21/M20 or CO_2		

Grooves are made by turning. The dimension is based on a strength requirement, in other words, torque τ. The axle's end can be fillet welded, unless the strength requirement demands a single bevel groove.

The cooling after the welding can be slowed down with a thermal insulation. If the axle is machined into a gear wheel, it is case hardened before the welding. Weld areas must be protected from carbonization.

Fine turning and possible grinding are done after the welding.

In alternative A, the cold drawn machine steel Ovako 550 softens due to the welding's thermal effect. The yield point drops to around 350 N/mm2. The quenched and tempered 25CrMo4 tempers if the axle's heat treatment temperature exceeds the original quenching and tempering temperature. The case hardened gear teeth soften if their temperature exceeds 250 °C.

12.2 Torsion bar

	Structural materials	
A	Arm	High strength structural steel S400
	Hubs	Cold drawn machine steel Ovako 550
B	Arm	High strength structural steel S400
	Hubs	Quenching and tempering steel 4CrMn16-4

For strength, the K-groove is the most optimal.

The cold drawn machine steel Ovako 550 softens due to the welding's thermal effect.

The yield point drops to around 350 N/mm2 in the heated zone.

The weld must be placed so that the structure's strength is not affected. Other structure weakening features, such as keyways, must be placed outside of the weld's thermal effect.

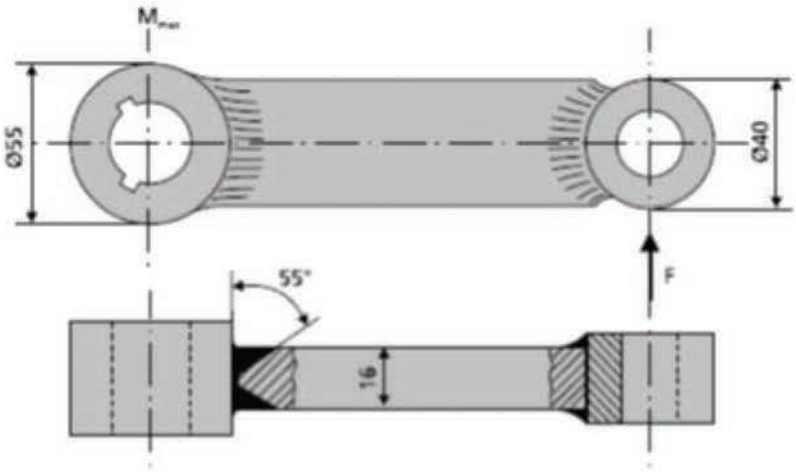

	Consumables		Working temperature
A	Rod	OK 48.00 OK Femax 38.65 Conarc 48 Conarc V 180	A torsion bar dimensioned like above, can be welded without increasing the working temperature. With higher material thicknesses, the need for increased working temperature is determined by the combined thickness of the joint.
	Wire	OK Autrod 12.51 LNM 26	
	Shielding gas	M21/M20 or CO_2	
B	Rod	OK 74.78 Conarc 60G	
	Wire	OK Aristorod 13.12 LNM 19	
	Shielding gas	M21/M20 or CO_2	

12.3 Repair welding of an axle

	Structural materials
A	Quenching and tempering steel 25CrMo4
B	Quenching and tempering steel 42CrM04
C	Machine steel Ovako 520
D	ICold drawn machine steel Ovako 550

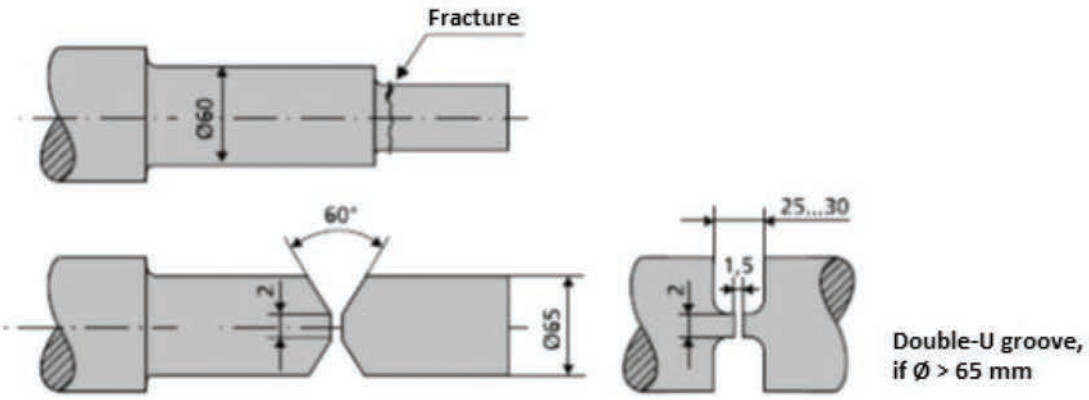

	Consumables		Working temperature	Heat treatments
A	Root passes	OK 48.00	150-200 °C	Stress relieving in 500-600 °C or maintaining the working temperature 2 hours after the welding
		Conarc 48		
	Filling layers	OK 74.78		
		Conarc 60G		
B	Root passes	OK 48.00	400-450 °C	Stress relieving in 540-600 °C. Soaking time 2 hours
		Conarc 48		
	Filling layers	OK 75.75		
		Conarc 80		
C	Root passes	OK 48.00	150-200 °C	Heat treating is not necessary
		Conarc 48		
D	Filling layers	OK 48.00		
		Conarc 48		

The destroyed part is removed from the axle. An X-groove provides a good support for the weld's start. If the groove is made by flame cutting, slag and scale must be removed from the surface by grinding. A turned conical shaped groove or an X-groove with an angle under 60° may cause root defects or hot cracks.

Runs are welded alternately to each side. The first sealing run must be opened before welding the first run on the second side.

With axles smaller than in the example, alternatives C and D do not require increased working temperature.

12.4 Gear

Structural materials	
Rim	High strength structural steel S400
Web	General structural steel S355J2
Hub	Machine steel Ovako 520

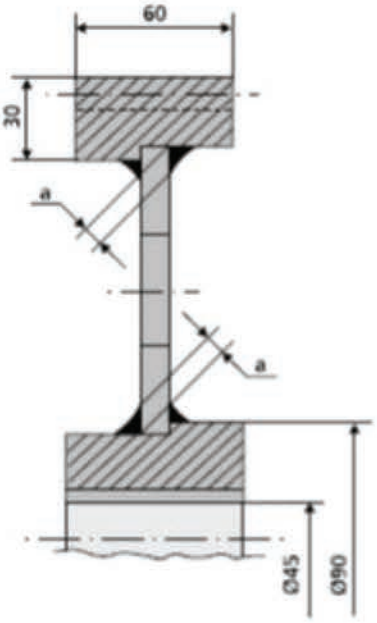

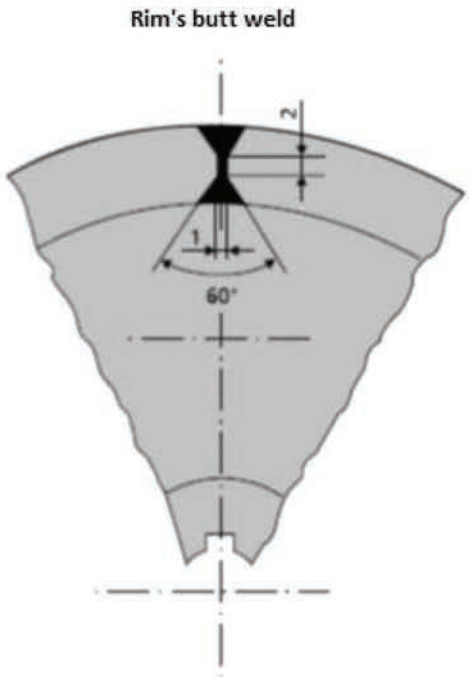

Structural materials		Heat treatments
Rod	OK 48.00	Stress relieving in 500-600 °C Soaking time 2 hours
	Conarc 48	
Wire	OK Autrod 12.51	
	LNM 26	
Shielding gas	M21/M20 or CO_2	

The X-groove for the rims's butt weld is machined. The root pass is welded with a Ø 2 mm rod. The first root passes must be opened and slag must be removed thoroughly. Staggered welding is recommended.

In gas arc welding, a reduced groove angle of 50 ° is used.

Throat thicknesses of the web's welds are determined by the strength requirements.

12.5 Lifting pin for vessel's shell

Structural materials	
Lifting pin	Machine steel Ovako 520
Plate	General structural steel S355J2

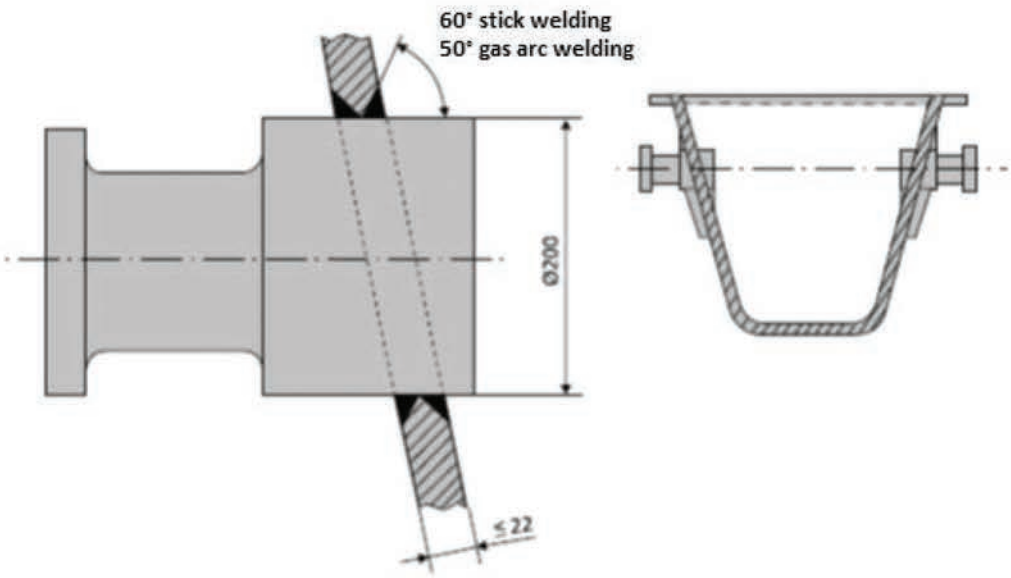

Consumables		Working temperature
Rod	OK 48.00	150-200 °C
	Conarc 48	
Wire	OK Autrod 12.51	
	LNM 26	
Shielding gas	M21/M20 or CO_2	

The groove can be flame cut, in which case scale must be removed from the surface. Groove angles smaller than in the instructions may cause root defects even when using smaller diameter rods or wires.

An increased working temperature is necessary since the cold, massive lifting pin would cool down the weld too quickly, which could cause cracking.

The penetration can be improved by directing the arc more towards the pin.

Cooling can take place in air. If the lifting pin is smaller, for example Ø 100-150 mm, the cooling should be slowed down with insulation.

12.6 Piston rod

Structural materials	
Arm	Machine steel Ovako 520
End	Machine steel Ovako 520 or General structural steel S355J2

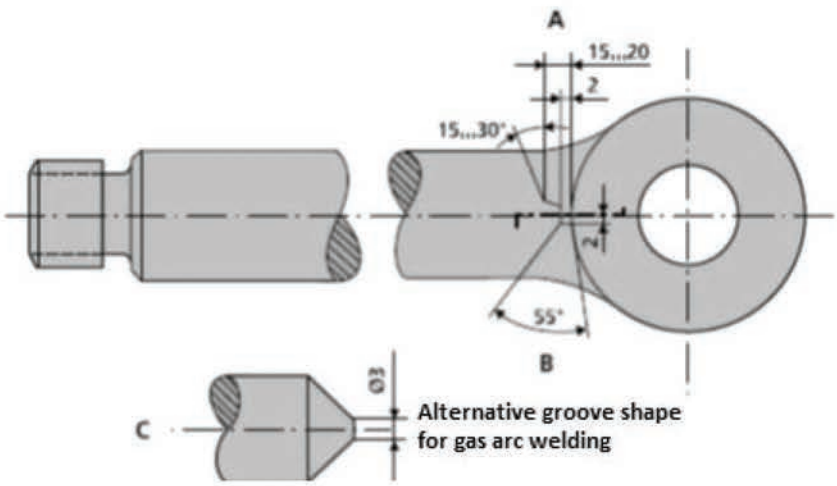

Consumables		Working temperature
Rod	OK 48.00	150-200 °C, if d ≥ 80 mm
	OK Femax 38.65	
	Conarc 48	
Wire	OK Autrod 12.64	
	LNM 27	
Shielding gas	M21/M20 or CO_2	

The root passes are welded with a Ø 2.5mm rod. Before welding the other side, the root must be opened. The slag must be thoroughly removed from the root pass. Welding advances as staggered welding.

In runs closer to the surface, larger diameter rods can be used to speed up the process.

If the piston rod's diameter, d, is under 45 mm, the groove is made in a shape resembling a slotted screwdriver (groove B in the figure).

For diameters d ≥ 45 mm, the groove shape A is used. A sharp angled groove made by turning is not recommended, since it might lead to an incomplete root and increase the risk of hot cracks and pores. In gas arc welding, the groove alternative C, in a shape of truncated cone, can be used.

12.7 Piston

Structural materials	
Piston	Machine steel 16Mn5
Arm	Machine steel Ovako 520

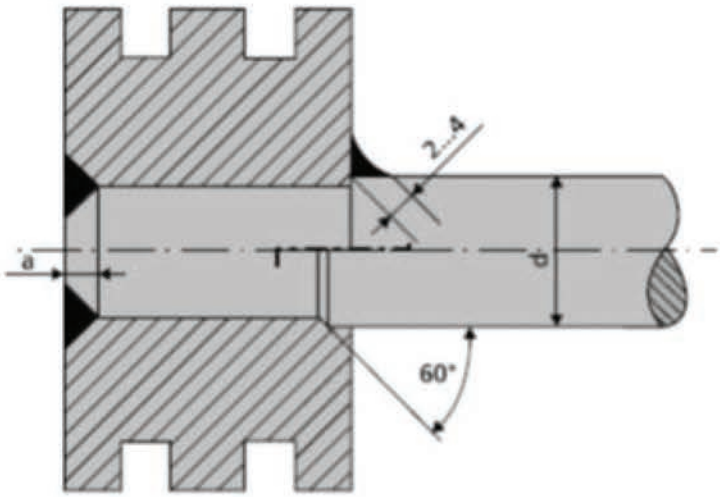

Consumables		Heat treatments
Rod	OK 55.00	150-200 °C, if d ≥ 80 mm
	Conarc 49	
Wire	OK Autrod 12.64	
	LNM 27	
Shielding gas	M20 or Argon	

Depth of the chamfer, a, on the piston's head is determined by the strength requirements.

The groove's shape on the rod's end depends on the piston's type of action.

Due to the increased sulphur content in 16Mn5, a high manganese filler metal and low arc energy should be used. Additionally, in gas arc welding, either argon or M20 gas mixture should also be used.

12.8 Valve head

	Structural materials	
A	Head	Stainless steel 18/12/3 (AISI 316)
	Stem	Stainless steel 18/12/3 (AISI 316)
B	Head	Stainless steel 18/12/3 (AISI 316)
	Stem	Machine steel Ovako 520

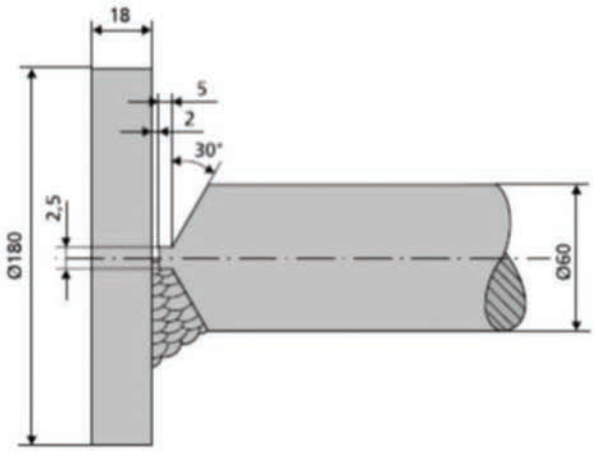

	Consumables		Working temperature
A	Rod	OK 63.30	Working temperature not increased.
		Limarosta 316L	
	Wire	OK Autrod 316LSi	
		LNM 316LSi	
	Shielding gas	M12	
B	Rod	OK 67.70*	Excessive heating of the weld must be avoided.
		Arosta 309Mo*	
	Wire	OK Autrod 309Lsi*	
		LNM 309LSi	
	Shielding gas	M12/M13	

*Especially with higher material thicknesses, only the surface of the non-stainless steel is beneficial to weld with an over-alloyed filler metal. After this, the welding can be continued with the case A's filler metals.

The groove is worked into the shape of a slotted screwdriver. Use of a turned conical shaped groove is not recommended since it may lead to an incomplete root, lowering the strength.

The root passes are welded with thin rods. The root is opened and slag is removed thoroughly. The welding continues as staggered welding.

The object must be kept as cold as possible during the welding. If necessary, the object must be left to cool down during the process.

12.9 Welding a stainless spindle to lever arm

	Structural materials	
A	Spindle	Stainless steel 18/8 (AISI 304)
	Lever arm	High strength structural steel S400
B	Spindle	Stainless steel 18/12/3 (AISI 316)
	Lever arm	High strength structural steel S400
C	Spindle	Stainless steel 18/12/3 (AISI 316)
	Lever arm	Stainless steel 18/8 (AISI 304)

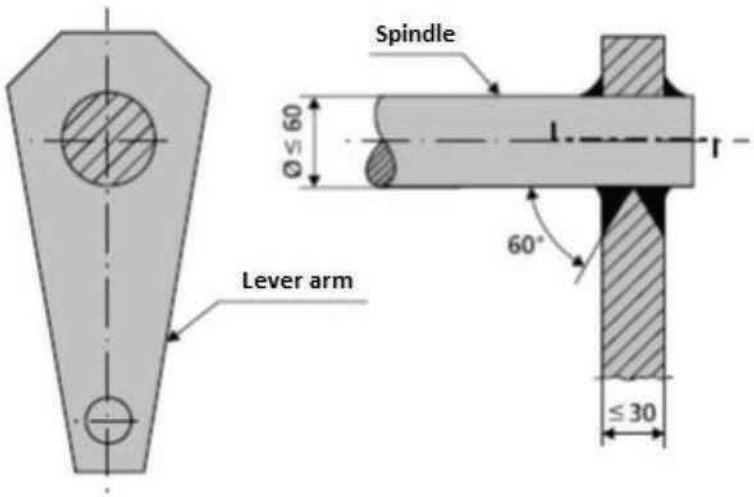

	Consumables		Number of sites
A	Rod	OK 67.70	Working temperature not increased. Excessive heating of the weld must be avoided.
		Arosta 309Mo	
	Wire	OK Autrod 309LSi	
		LNM 309LSi	
	Shielding gas	M12/M13 or Argon	
B	Rod	OK 67.70	
		Arosta 309Mo	
	Wire	OK Autrod 316Lsi	
		LNM 309 LSi	
	Shielding gas	M12	

C	Rod	OK 63.30	
		Limarosta 316L	
	Wire	OK Autrod 316Lsi	
		LNM 309 LSi	
	Shielding gas	M12	

The groove can be either a fillet (in the figure, on top of the spindle) or K-groove (underside), depending on the strength requirement.

The working temperature is kept as low as possible. In multi-pass welding, the weld must be left to cool down to room temperature between the passes.

A prerequisite for good corrosion resistance is thorough slag removal, pickling and passivation. If a wire brush is used, the wires need to be stainless steel. A grinding wheel cannot contain iron.

12.10 Steering joint

Structural materials	
Arm	High strength structural steel 4CrMn16-4*
Pin	Boron steel 20MnB4

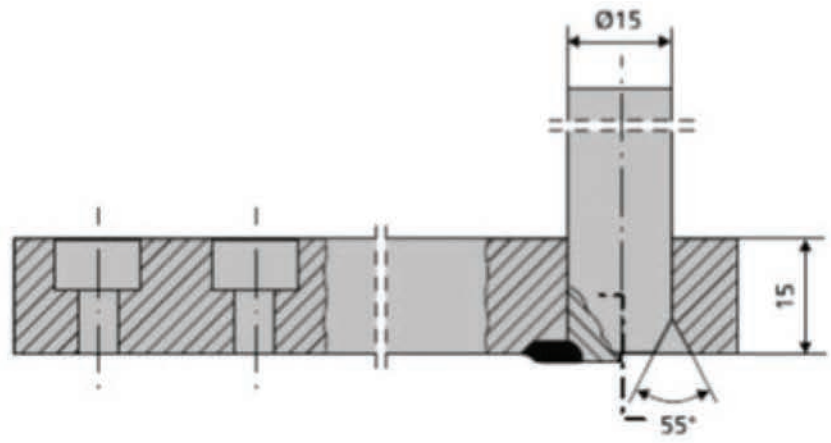

Consumables		Working temperature
Rod	OK 74.78	50-100 °C. Increased working temperature is not needed.
	Conarc 60G	
Wire	OK Aristorod 13.12	
Shielding gas	LNM 19	
	M21/M20	

For the groove, either a fillet or V-groove can be selected, depending on the strength requirement. The groove's throat thickness depends on the strength requirement. After working the groove, the pin is hardened.

The filler metal's yield point 650 N/mm2 is roughly the same as for 4CrMn16-4. The heat from the welding does not conduct further to the pin, so the pin's hardness stays unchangeable.

See the more detailed instructions for welding the 4CrMn16-4* steels from pages 42-43.

12.11 Joint

	Structural materials	
A	Flat bars	High strength structural steel S400
	Axle pin	Machine steel Ovako 520, case hardened
B	Flat bars	High strength structural steel S400
	Axle pin	Boron steel 20MnB4, hardened

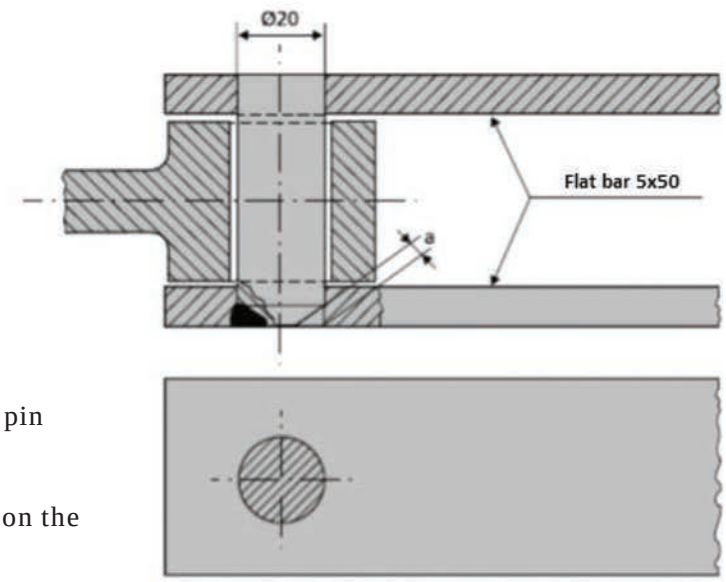

The welding area on the case hardened pin must be protected from carbonization.

The weld's throat thickness, a, is based on the strength requirement.

	Consumables	
A	Rod	OK 48.00
		Conarc
	Wire	OK Autrod 12.51 OK Tubrod 14.12
		LNM 26, Outershield T55-H
	Shielding gas	M21 or CO_2
B	Rod	OK 74.78
		Conarc 60G
	Wire	OK Aristorod 13.12
		LNM 19
	Shielding gas	M21/M20

12.12 Track link A

Structural materials	
Chain	Boron steel 20MnB4, hardened
Shoe	High strength structural steel S400

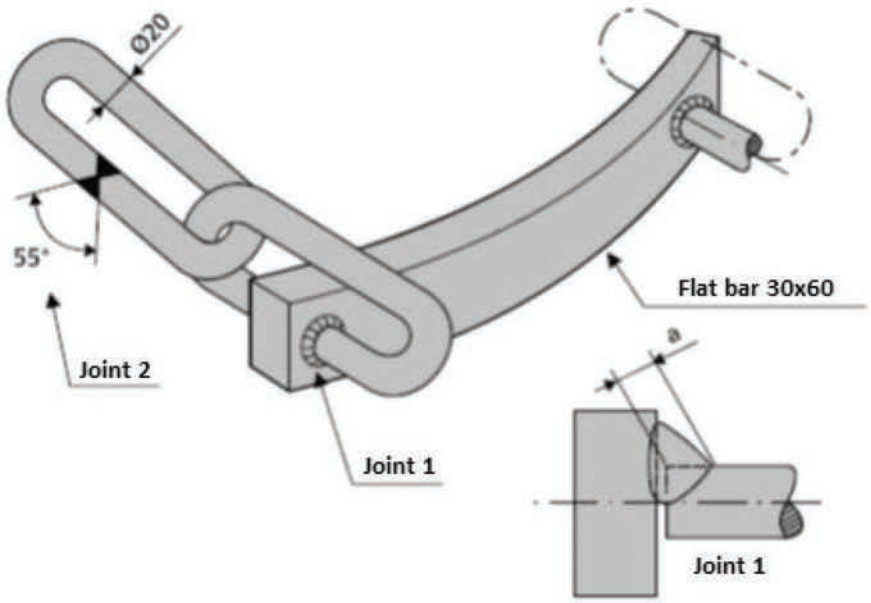

Consumables		Working temperature
Rod	OK 74.78	50-100 °C in joint 1
	Conarc 60G	
Wire	OK Aristorod 13.12	Increased working temperature is not needed in gas arc welding.
	LNM 19	
Shielding gas	M21/M20	

In the weld joint 1, the fillet weld's throat thickness = 4-5 mm.

The weld joint 2 has an X-groove.

12.13 Track link B

Structural materials	
Chain	Boron steel 27MnCrB5-2, hardened
Shoe	Boron steel 27MnCrB5-2, hardened
Anti-skid	Concrete steel, reinforcing bar A 400 HW

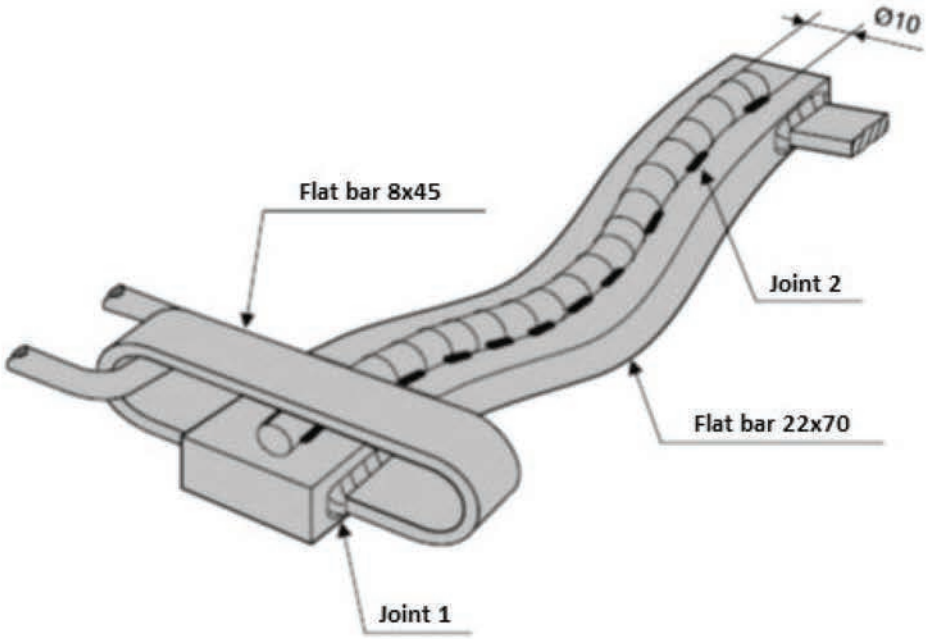

Consumables		Working temperature
Rod	OK 74.78	50-100 °C
	Conarc 60G	
Wire	OK Aristorod 13.12	
	LNM 19	
Shielding gas	M21/M20	

In the weld joint 1, the fillet weld's throat thickness = 3-4 mm. Alternatively, a fully penetrating K-groove can be used, which is made on the chain.

The anti-skid (weld joint 2) can be welded before or after hardening the shoe part. An increased working temperature is not necessary.

Boron steel 30MnB5 is weldable following the instructions on pages 50-51. In this case, the working temperature is 150-200 °C.

12.14 Welded beam

Structural materials	
Flanges	High strength structural steel S400
Web plate	General structural steel S355J2

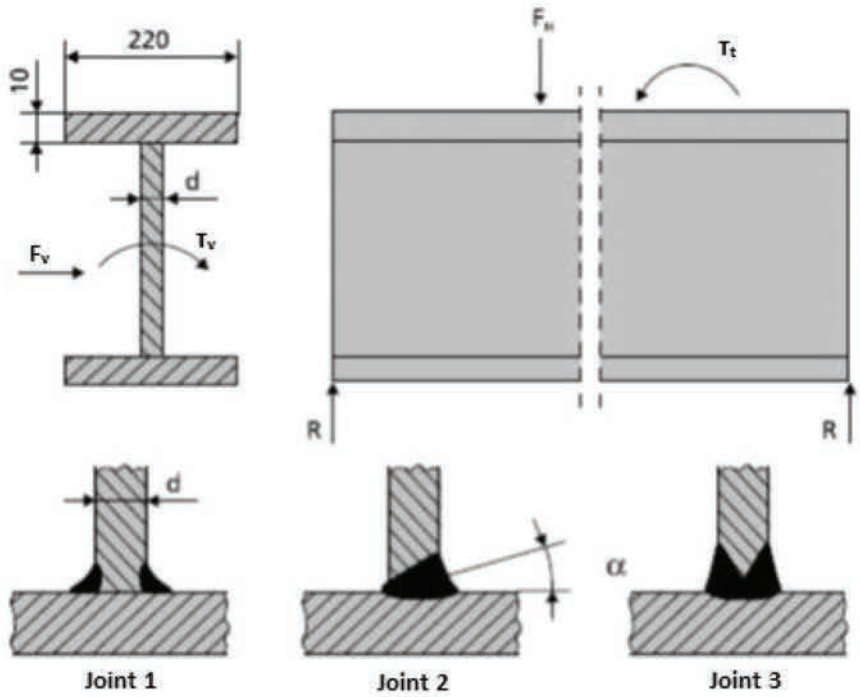

Consumables	
Rod	OK 48.00
	Conarc 48
Wire	OK Autrod 12.51 OK Tubrod 14.12
	LNM 26
Shielding gas	Outershield T55-H
	M21 or CO_2

In the fillet weld (1), penetration in MMA welding can easily be lacking; in which case the web plate is not continuously attached to the flanges. As the weld cools down, stresses develop on such points, which may lead to cracking in the weld's root.

With web plate thicknesses d ≤ 5 mm, the groove shape 2 can be used. For full penetration, a 55 ° bevel angle is the most advantageous. The joint's asymmetry causes distortion α to develop as the weld cools down and shrinks. This can be avoided with a correct pre-angling of the plates before the welding. To prevent root defects, penetration and possible burn through must be observed and the defects must be fixed.

A K-groove on weld joint 3 leads to a strong and whole weld which has the most beneficial state of strain, but is the most expensive.

The high strength structural steel S400 is well suited for welded beams in which the strength is used as the design criterion. The groove selection must be based on approved design instructions. As the strength requirements increase (Fv, τv, τt), the groove is selected in order 1, 2, 3

12.15 Welding a crane rail to beam

	Structural materials	
A	Rail	High strength structural steel S400
	Beam	General structural steel S235J0
		High strength structural steel S400
B	Rail	High strength structural steel 4CrMn16-4*
	Beam	General structural steel S235J0
		High strength structural steel S400

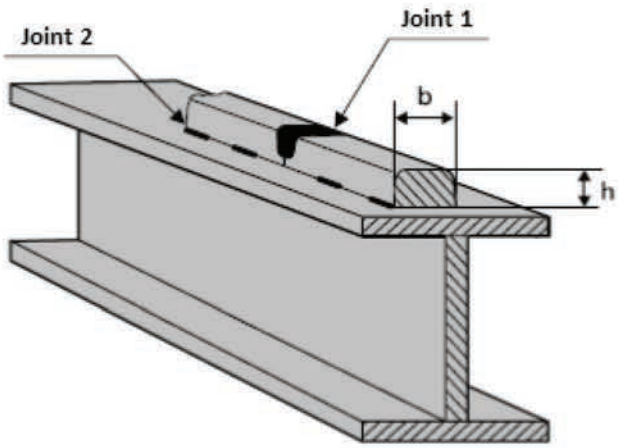

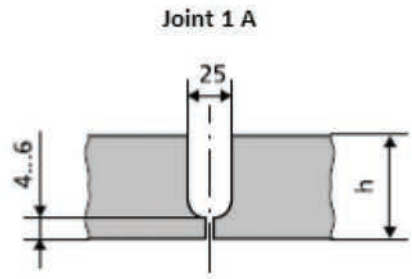

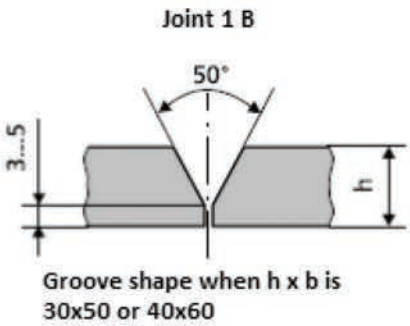

A Ø 5 mm rod is used in the welding. In welding of the 4CrMn16-4* rail, the surface passes are welded with hardfacing rods so that the hardness and abrasion resistance are equal to the base material. Support molds in the welding are not needed.

The joint can be gas arc welded, if wind and other circumstances allow it.

	Joint 1	
	Consumables	
A	Rod	OK 48.00
		Conarc 48
B	Rod	OK 48.00
		Conarc 48
	Surface passes	OK Weartrode 30 OK Weartrode 30 HD
		Wearshield BU-30

	Joint 2	
	Consumables	
A	Rod	OK 48.00
		OK Femax 38.65
		Conarc 48
		Conarc V 180
B	Wire	OK Autrod 12.51
		OK Tubrod 14.12
		LNM 26
		Outershield T55-H
	Shielding gas	M21 or CO2

12.16 Support wheels, rolls

Structural materials
Machine steel Ovako 520

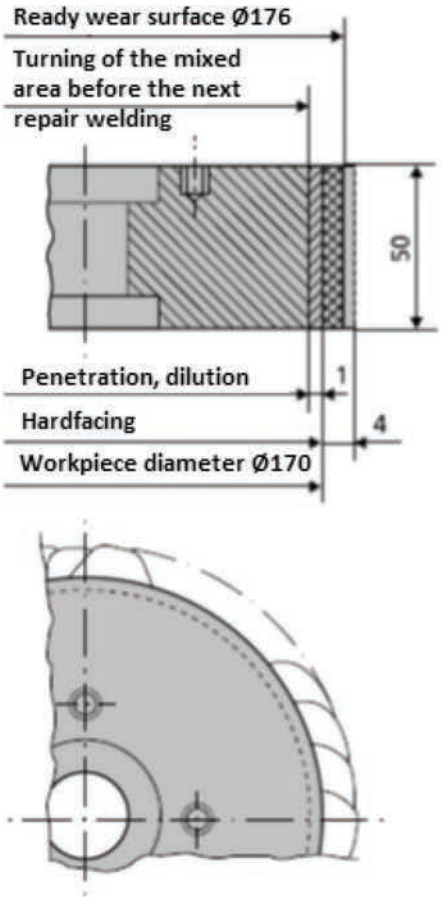

Consumables		Working temperature	Heat treatments
Rod	OK Weartrode 30	150-200 °C, if the wheel's diameter Ø > 200mm	Stress relieving in 450–500 °C
	Wearshield BU-30		
Wire	OK Tubrodur 35 S M		
	Lincore 40-O		
Shielding gas	CO_2		

Often it is profitable to make the support wheel or roll that is under high wear from highly weldable and machinable steel, for example the Ovako 520. The wear-resistant surfacing is then welded on the surface of the base material. A hot rolled bar can be used as a blank, until the limit of Ø 200 mm.

With recommended consumables, the wear surface gets a good combination of hardness and toughness, as well as a well spread, even and highly machinable finish.

Because the weld metal's hardness decreases as the temperature exceeds 500 °C, excessive heating must be avoided, particularly in the welding of small rolls.

The need for an increased working temperature and stress relief needs to be determined case by case. The decisive factors are the wheel's size and operating environment. Smaller wheels, with a diameter of less than 200 mm, do not require an increased working temperature. Surfacing always develops tensile stresses on the surface, which are unprofitable for fatigue life. With an increased working temperature and stress relieving, such tensions can be reduced.

In future repair welds, the surface is turned bare until reaching the base material, to prevent dilution of the material

12.17 Corrector lever's surfacing

Structural materials
Machine steel Ovako 520

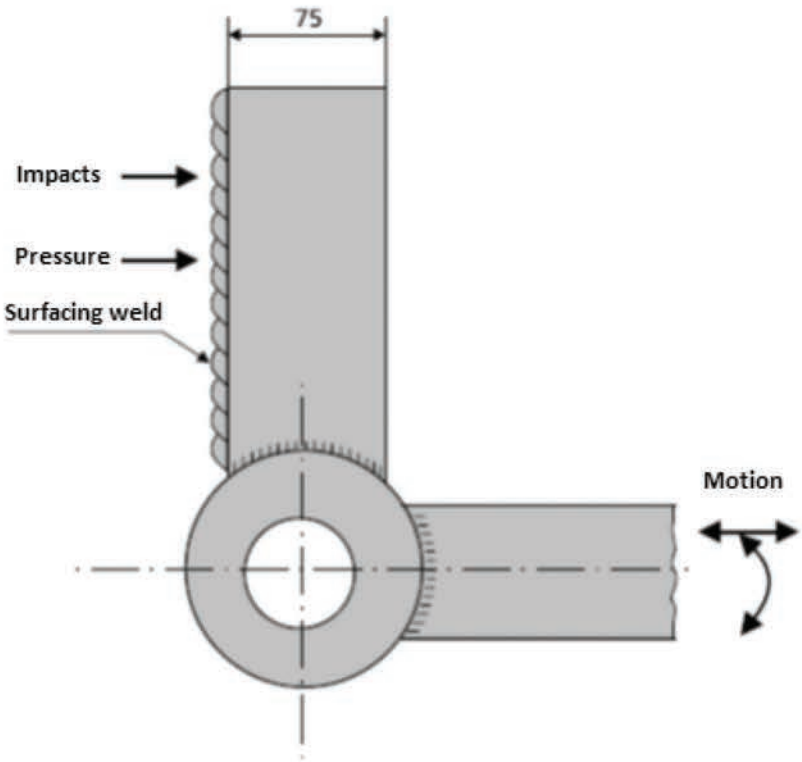

The hardness of the surfacing layer after tempering in 550 °C is 53-57 HRC.

The layer has good tempering resistance until 500 °C.

Consumables		Working temperature
Rod	OK Tooltrode 50	300-500 °C
	Wearshield ME (e)	
Rod	OK Weartrode 50	300-400 °C*
	Wearshield MM	

*If the weld should be whole, an increased working temperature is necessary. If minor cracking on the weld's surface is accepted, the welding can be done without increasing the working temperature.

12.18 Shovel loader's wear plate

Structural materials
High strength structural steel S400

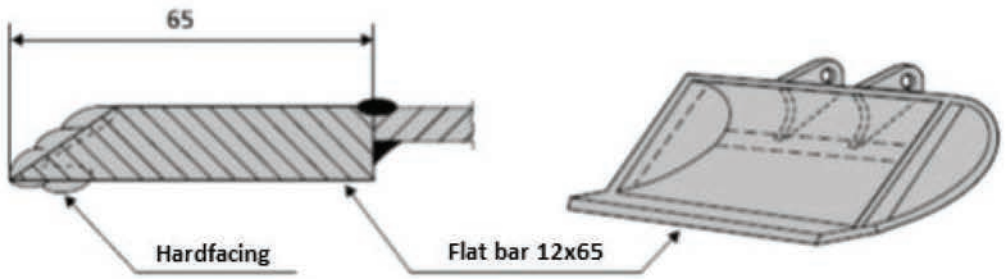

Consumables		Working temperature
Rod	OK Weartrode 60 T	300-500 °C
	Wearshield 60 (e)	
Rod	OK Weartrode 55 HD	300-400 °C*
	Wearshield MI (e)	

*If the weld should be whole, an increased working temperature is necessary. If minor cracking on the weld's surface is accepted, the welding can be done without increasing the working temperature.

12.19 Axles's temporary repair weld

	Structural materials
A	Quenching and tempering steel 42CrMo4
B	Quenching and tempering steel 25CrMo4
C	Machine steel Ovako 520
D	Cold drawn machine steel Ovako 550

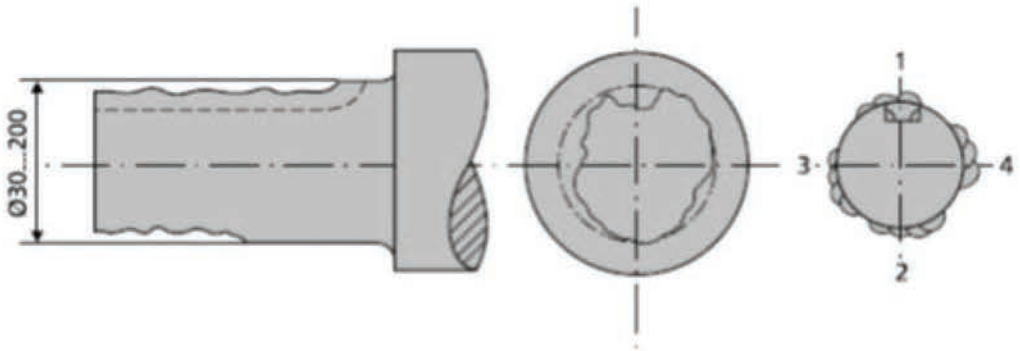

	Consumables		Number of sites
A	Rod	OK 68.82	Working temperature not increased. Excessive heating of the weld must be avoided.
		Limarosta 312	
B	Rod	OK 68.82	
		Limarosta 312	
C	Rod	OK 48.00	
		Conarc 48	
D	Rod	OK 48.00	
		Conarc 48	

The welding area is cleaned of dirt and the destroyed, flaked or cracked layer must be cleaned.

The welding is started with a Ø 3.2 mm rod. An alternating three-pass welding is used. The second and subsequent layers can be welded using larger diameter rods.

To prevent distortions, the workpice should be kept as cool as possible during the welding. After the welding, the object can cool freely in air or covered.

The cold drawn machine steel Ovako 550's strength properties do not change significantly if the instructed practice is followed.

The damaged axle can be repaired by surfacing and then turning and milling it to the original dimensions. With a correct filler metal and welding process, the axles's strength and toughness remain almost unchanged

12.20 Gear tooth's temporary repair weld

Structural materials
Case hardening steel 20NiCrMo2-2

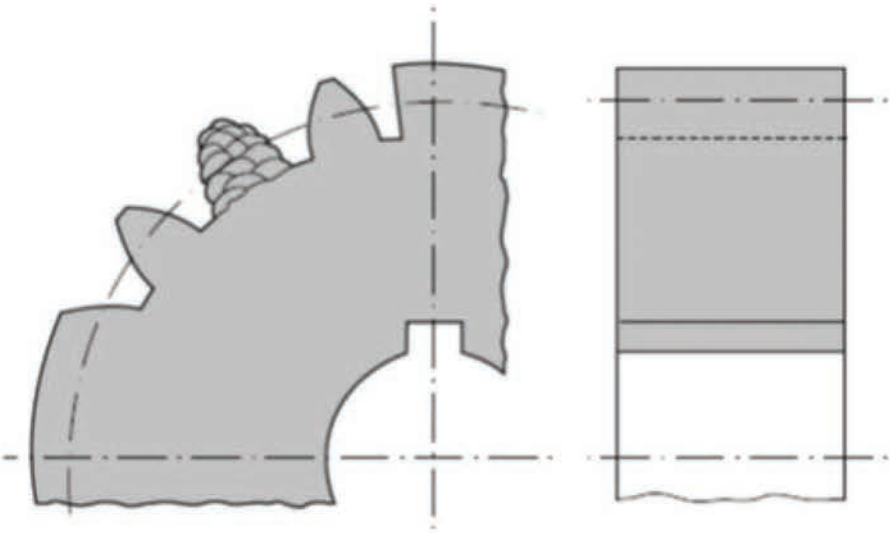

Consumables	
Rod	OK 68.82
	Limarosta 312

The repaired tooth's strength and wear resistance should be as high as possible, and the shape must be possible to mill.

The damaged tooth's root is cleaned by grinding it. Caution is needed so that damaging the adjacent teeth is avoided.

The filler metal is 29 Cr/9 Ni. The resulting weld has an austenitic-ferritic microstructure, which strain hardens.

The weld is practically machinable. In use, the hardness increases to about 45 HRC.

The passes are welded with Ø 2.5-3.2 mm rods. The weld has to be maintained as cool as possible. The adjacent teeth must be protected from spatter.

The tooth's root's yield point is about 600 N/mm^2 and hardness is roughly 240 HB.

12.21 Example of friction welding

Structural materials	
Test piece A	Quenching and tempering steel C45
Test piece B	Stainless steel 18/8 (AISI 304)

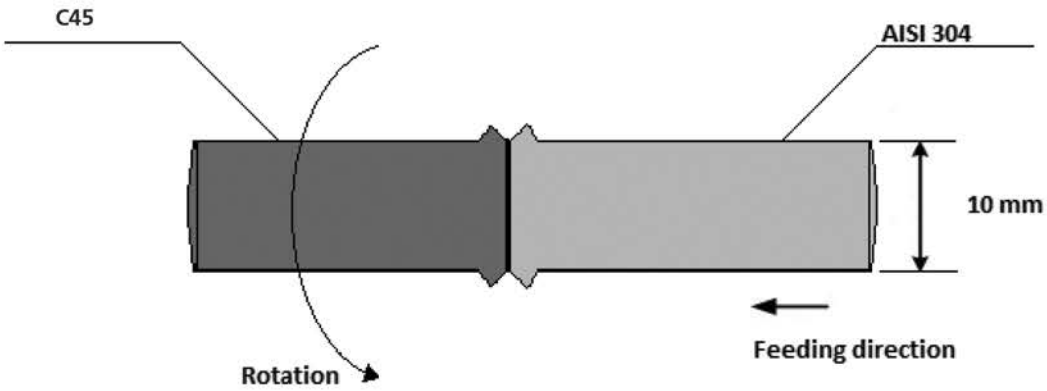

Test pieces A and B were joined together by friction welding. The welding was done with a continuous drive friction welding machine. With the correct parameters, both high strength and ductility can be achieved.

The joint's strength can be as high as that of stainless steel, about 870MPa.

13 – WELDING STANDARDS

EN ISO 9606-1	Qualification testing of welders. Fusion welding. Steels
EN ISO 17637	Non-destructive testing of welds. Visual testing of fusion-welded joints
EN 1011-1	Welding. Recommendations for welding of metallic materials. General guidance for arc welding
EN 1011-2	Welding. Recommendations for welding of metallic materials. Arc welding of ferritic steels
EN 1011-3	Welding. Recommendations for welding of metallic materials. Arc welding of stainless steels
EN ISO 17636-1	Non-destructive testing of welds. Radiographic testing. X- and gamma-ray techniques with film
EN ISO 17636-2	Non-destructive testing of welds. Radiographic testing. X- and gamma-ray techniques with digital detectors
EN 1708-1	Welding. Basic welded joint details in steel. Pressurized components
EN 1708-2	Welding. Basic weld joint details in steel. Non-internal pressurized components
EN ISO 17640	Non-destructive testing of welds. Ultrasonic testing. Techniques, testing levels, and assessment
EN 1993-1-9	Eurocode 3. Design of steel structures. Fatigue
EN 14700	Welding consumables. Welding consumables for hard-facing
EN ISO 2560	Welding consumables. Covered electrodes for manual metal arc welding of non-alloy and fine grain steels. Classification
EN ISO 3834-1	Quality requirements for fusion welding of metallic materials. Criteria for the selection of the appropriate level of quality requirements
EN ISO 3834-2	Quality requirements for fusion welding of metallic materials. Comprehensive quality requirements
EN ISO 3834-3	Quality requirements for fusion welding of metallic materials. Standard quality requirements
EN ISO 3834-4	Quality requirements for fusion welding of metallic materials. Elementary quality requirements

EN ISO 3834-5	Documents with which it is necessary to conform to claim conformity to the quality requirements of ISO 3834-2, ISO 3834-3 or ISO 3834-4
EN ISO 5817	Welding. Fusion-welded joints in steel, nickel, titanium and their alloys (beam welding excluded). Quality levels for imperfections
EN ISO 6947	Welding and allied processes. Welding positions
EN ISO 9692-1	Welding and allied processes. Types of joint preparation. Manual metal arc welding, gas-shielded metal arc welding, gas welding, TIG welding and beam welding of steels
EN ISO 13916	Welding. Guidance on the measurement of preheating temperature, interpass temperature and preheat maintenance temperature
EN ISO 13920	Welding. General tolerances for welded constructions. Dimensions for lengths and angles. Shape and position
EN ISO 14175	Welding consumables. Gases and gas mixtures for fusion welding and allied processes
EN ISO 14341	Welding consumables. Wire electrodes and weld deposits for gas shielded metal arc welding of non-alloy and fine grain steels. Classification
EN ISO 15607	Specification and qualification of welding procedures for metallic materials. General rules
EN ISO 15609-1	Specification and qualification of welding procedures for metallic materials. Welding procedure specification. Arc welding
EN ISO 15609-2	Specification and qualification of welding procedures for metallic materials. Welding procedure specification. Gas welding
EN ISO 17632	Welding consumables. Tubular cored electrodes for gas shielded and non-gas shielded metal arc welding of non-alloy and fine grain steels. Classification
EN ISO 17638	Non-destructive testing of welds. Magnetic particle testing
EN ISO 17663	Welding. Quality requirements for heat treatment in connection with welding and allied processes

14 – GOOD WORKING ENVIRONMENT ENHANCES PRODUCTIVITY

Investing in industrial safety is profitable! Accidents and sickness absences, as a result of accident, are expensive to companies. In addition to the direct costs, there are also other expenses such as: time wasted in solving the situation, delayed deliveries, and overtime costs to catch up with the schedule.

An absent worker needs to be replaced with another one. The new worker needs to be hired and trained, which may cause temporary negative effects on work performance and product quality. Bad working conditions may have the same negative effects. Investing in industrial safety and working environment motivates employees and thus improves work results.

14.1 Industrial safety in welding

Due to welding's certain characteristics, welding has its own challenges and priorities for safety. In a well-organized workstation, the welder is not exposed to welding fumes, dust, radiation or noise, and the risk of an accident is low.

14.2 Welding fumes

Welding and cutting always produces fumes. The harmful fumes contain different vapors and gases, with the vapors being more problematic. Slag-producing processes usually create more vapors, and gas arc processes create more gases.

The vapor is formed from particles that develop in high temperatures as the metals vaporize. The majority of the vapors, about 90-95%, come from the filler metal. The vapors from highly alloyed steels and aluminum are the most problematic. The vapors from stainless steel contain harmful chromium and nickel compounds, of which some are categorized as carcinogenic. The UV radiation and heat originating from the arc generate harmful ozone and nitrogen oxides. They develop close to the arc and dilute quickly to the surrounding air.

In addition to the selected welding process, the volume of the developing vapors can be lowered by using gases with a low CO2 content, lowering the welding current, optimizing the arc voltage, and decreasing the filler metal's diameter.

Ventilation at the workstation must be arranged in a way so that the welder's exposure to welding fumes is minimal. The workshop's general ventilation is not sufficient enough for eliminating the welding fumes. Usually the best solution is a local exhaust ventilation which filters the air and then releases it to the atmosphere. Modern units are both powerful and easy to move.

In the welding of high alloy steels and aluminum, it is recommended to use a personal respirator as well.

An efficient local exhaust ventilation clears 30-80% of the welding vapors, and with a respirator, the volume of the vapors can be lowered 80-95% in MIG/MAG welding.

14.3 Radiation and noise

Welding generates invisible, yet harmful ultraviolet and infrared radiation and so called visible blue light. The welder must use personal protection against the harmful radiation.

An auto-darkening welding mask is a safe and comfortable solution, and it speeds up the work, as constant mask lifting is not needed.

In addition to the welder, other employees must be protected from the welding's radiation and noise. Each workstation should be separated from its surroundings by using safety curtains or screens.

14.4 Minimizing the risk of accidents

Good order in a workshop improves safety. Accident risk is lower when tools, hoses, cables, etc. are well organized.

A neat workstation is also more pleasant to work at, improving workers' motivation and leading to enhanced productivity and quality.

Local exhaust ventilations	Efficient local exhaust ventilation and lighting for the workstation
Filters	With filtering air cleaners, the air can be cleared of fumes and dust
Protective equipment	Personal protective equipment protects the welder from UV- and IR radiation
Welding curtains	With curtains, radiation and spatter can be prevented from spreading to surrounding areas
Noise screens	Screens prevent noise and radiation from spreading to surrounding areas
Hose reels	Hoses and cables on reels lower accident risk, improve work performance, lower maintenance costs, and make the cleaning of the workstation easier

CO-92 GB 19:11 © Ovako 2019

Disclaimer

The information in this document is for illustrative purposes only. The data and examples are only general recommendations and not a warranty or a guarantee. The suitability of a product for a specific application can be confirmed only by Ovako once given the actual conditions. The purchaser of an Ovako product has the responsibility to ascertain and control the applicability of the products before using them.

Continuous development may necessitate changes in technical data without notice. This document is only valid for Ovako material. Other material, covering the same international specifications, does not necessarily comply with the properties presented in this document.

©Ovako 2019

Ovako AB
SE-111 87 Stockholm, Sweden
Phone: +46 (0)8 622 13 00

www.ovako.com